Camera AI Theta

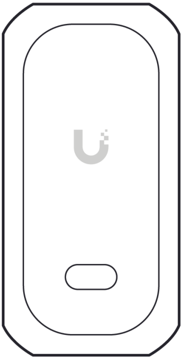

a

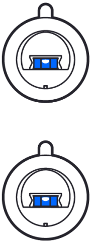

b

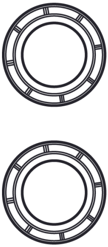

c

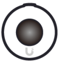

d

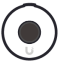

e

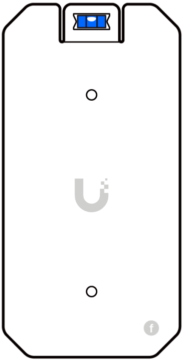

f

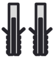

g

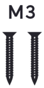

h

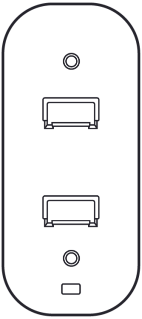

i

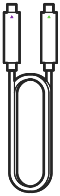

j

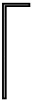

k

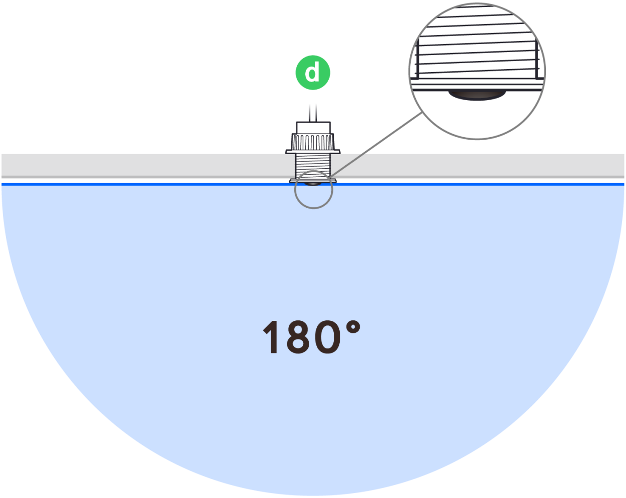

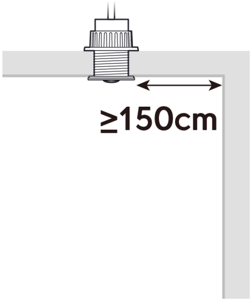

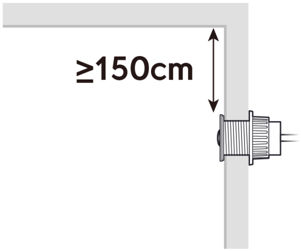

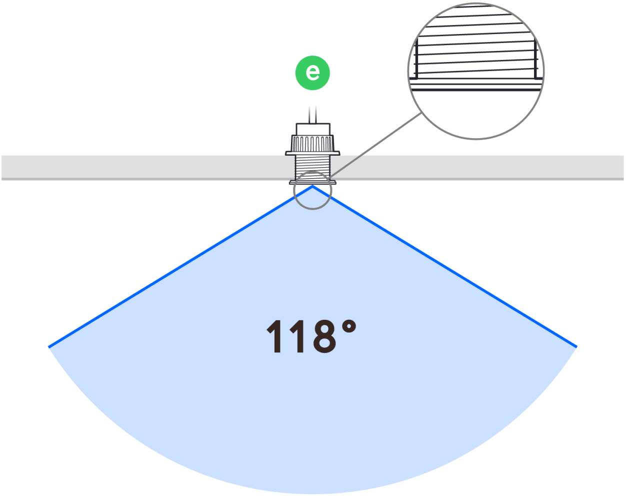

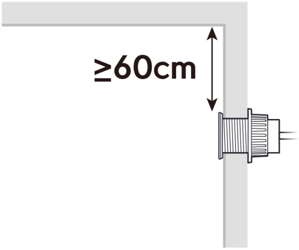

1

A

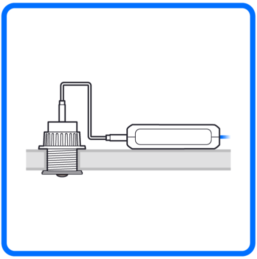

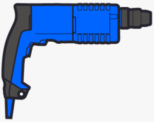

1

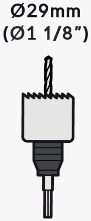

2

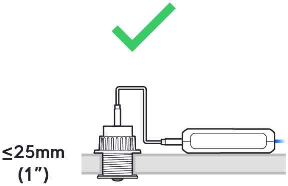

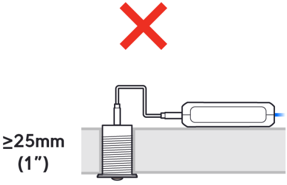

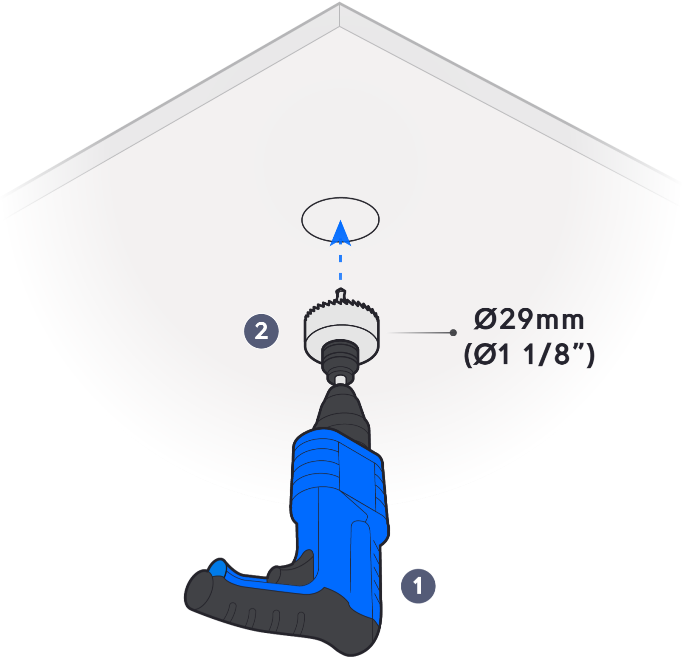
Ø29mm
(Ø1 1/8”)
2
1

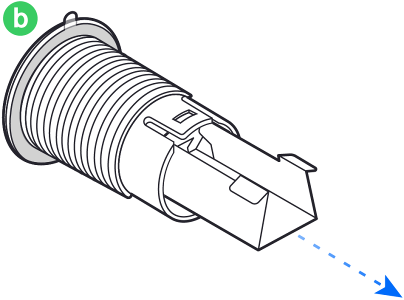

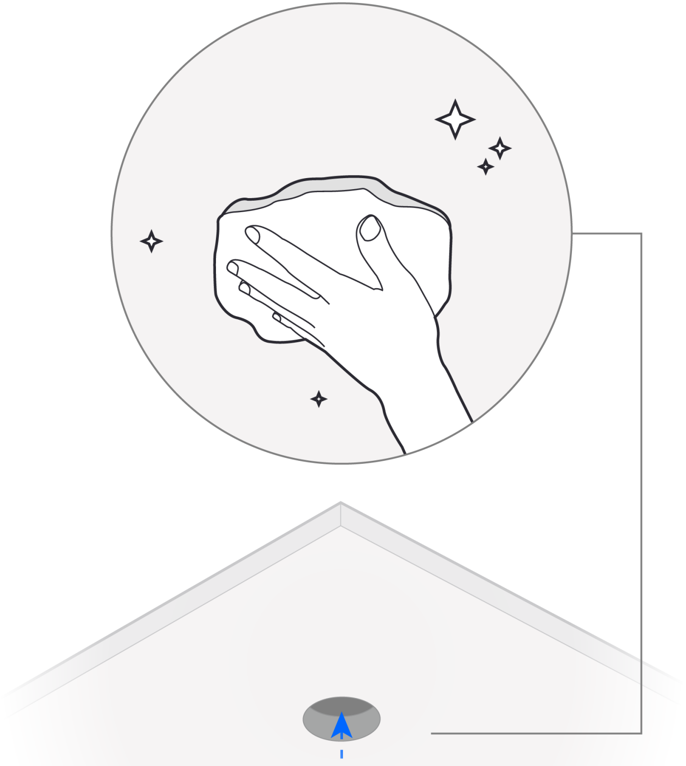

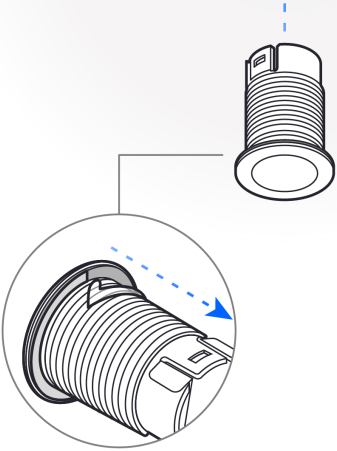

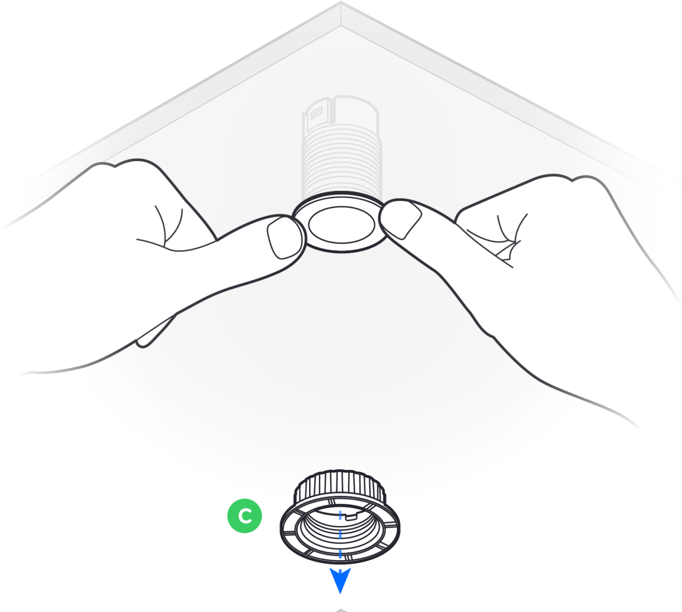

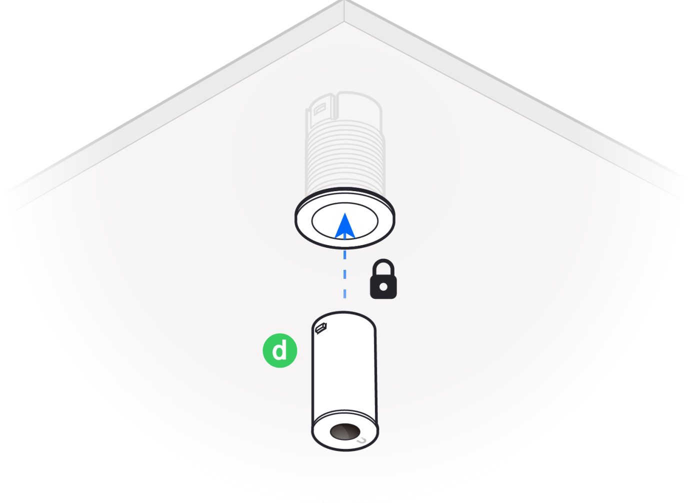

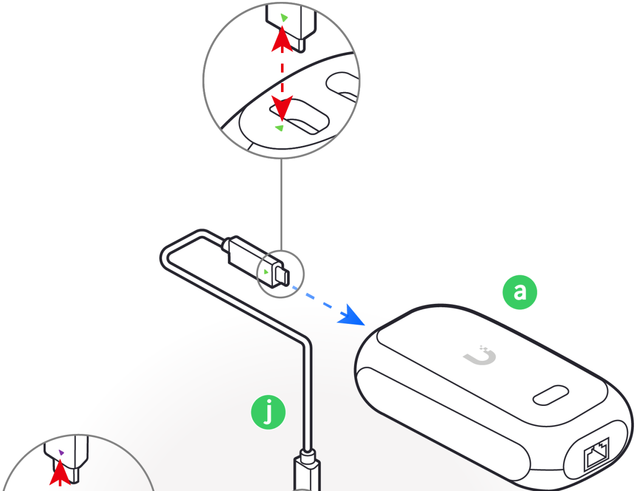

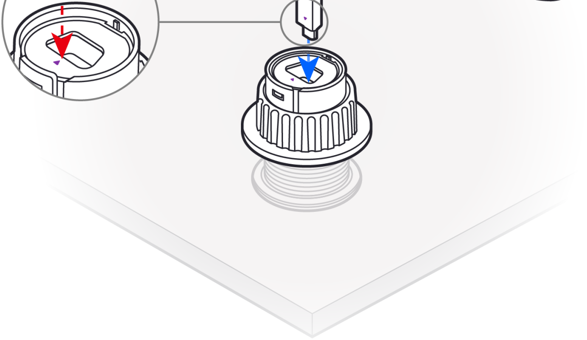

B

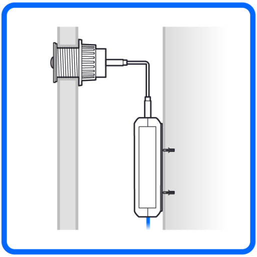

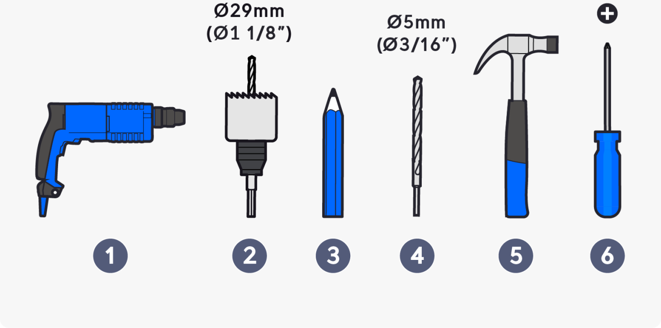
Ø29mm
(Ø1 1/8")
Ø5mm
(Ø3/16")
1
2
3
4
5
6

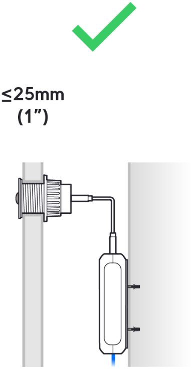

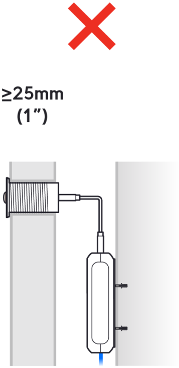

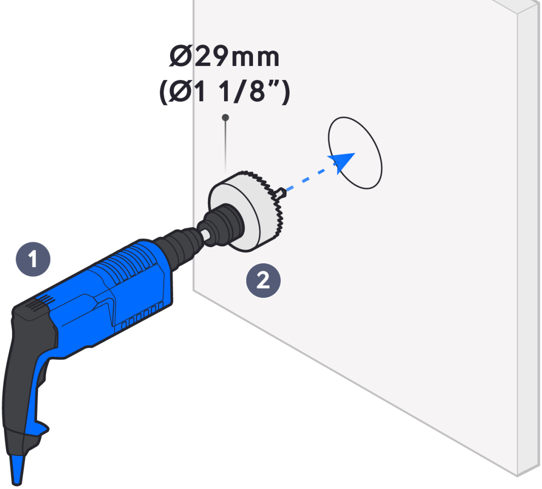
Ø29mm
(Ø1 1/8")
1
2

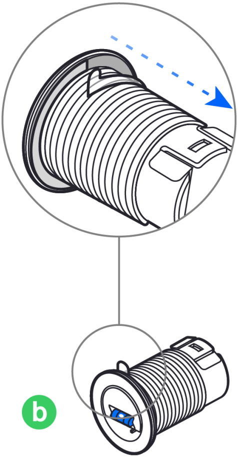

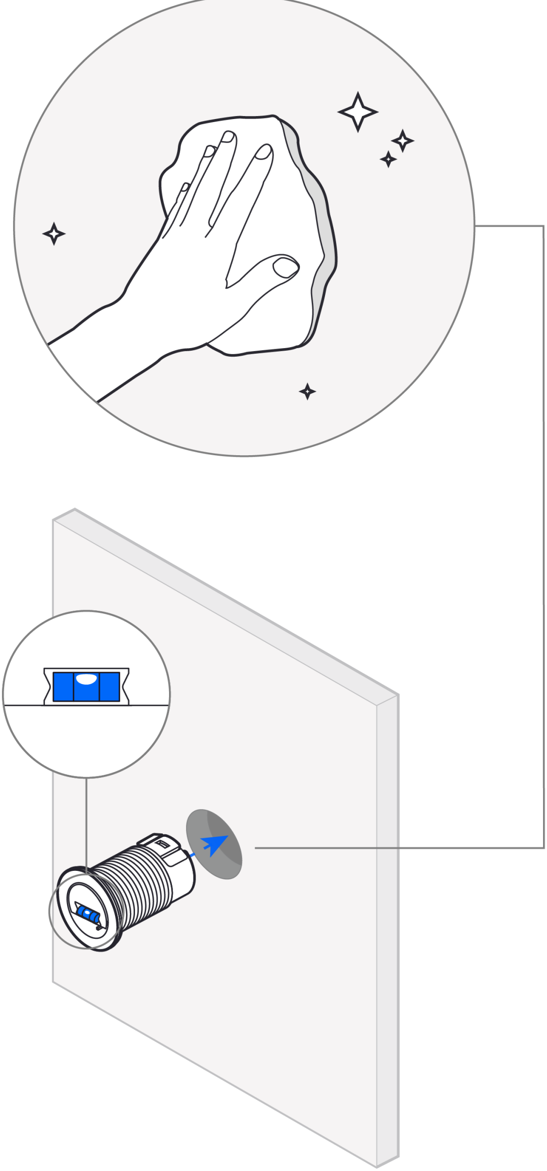

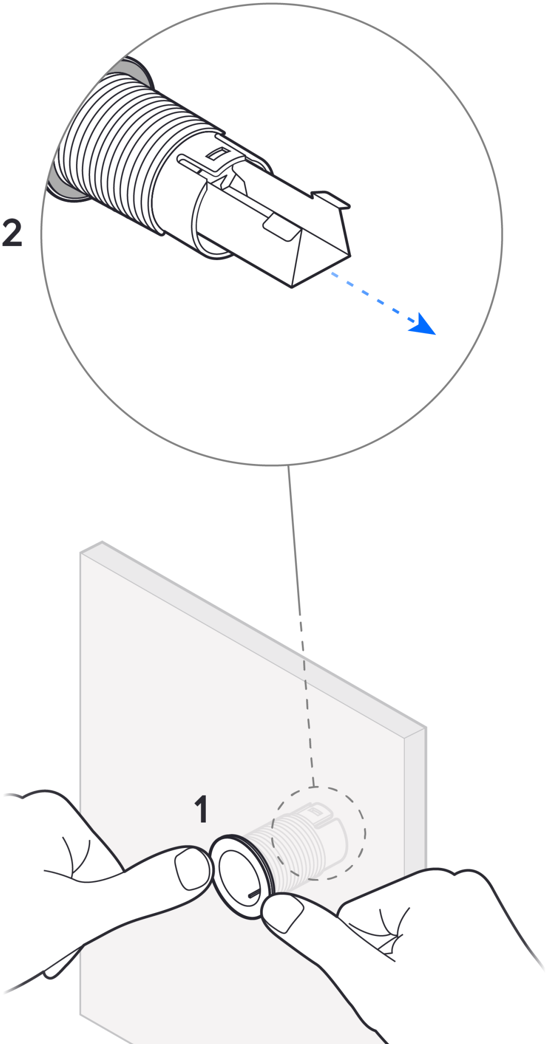

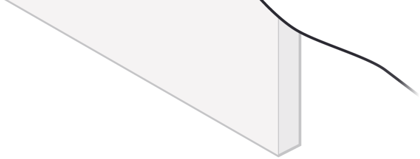

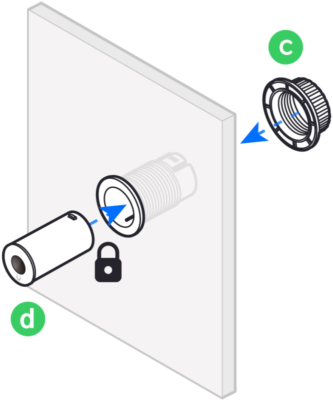

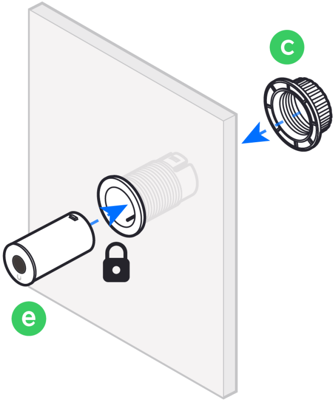

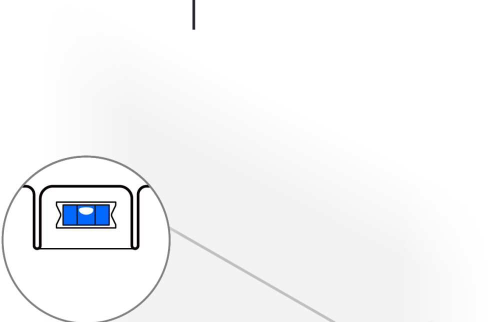

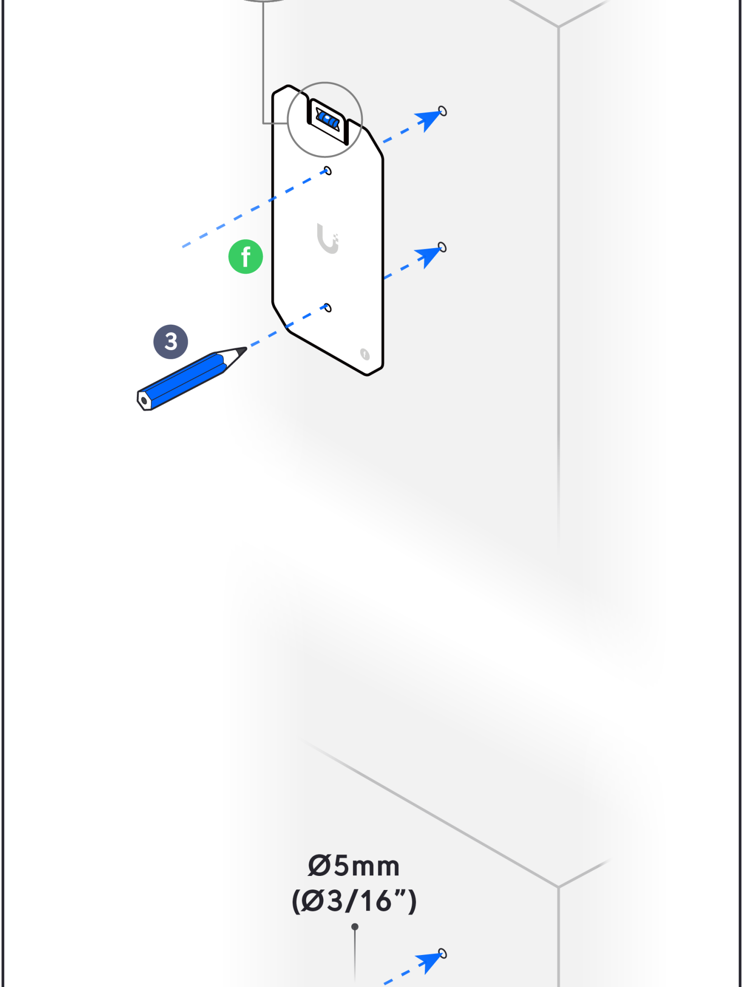
f
3
Ø5mm
(Ø3/16”)

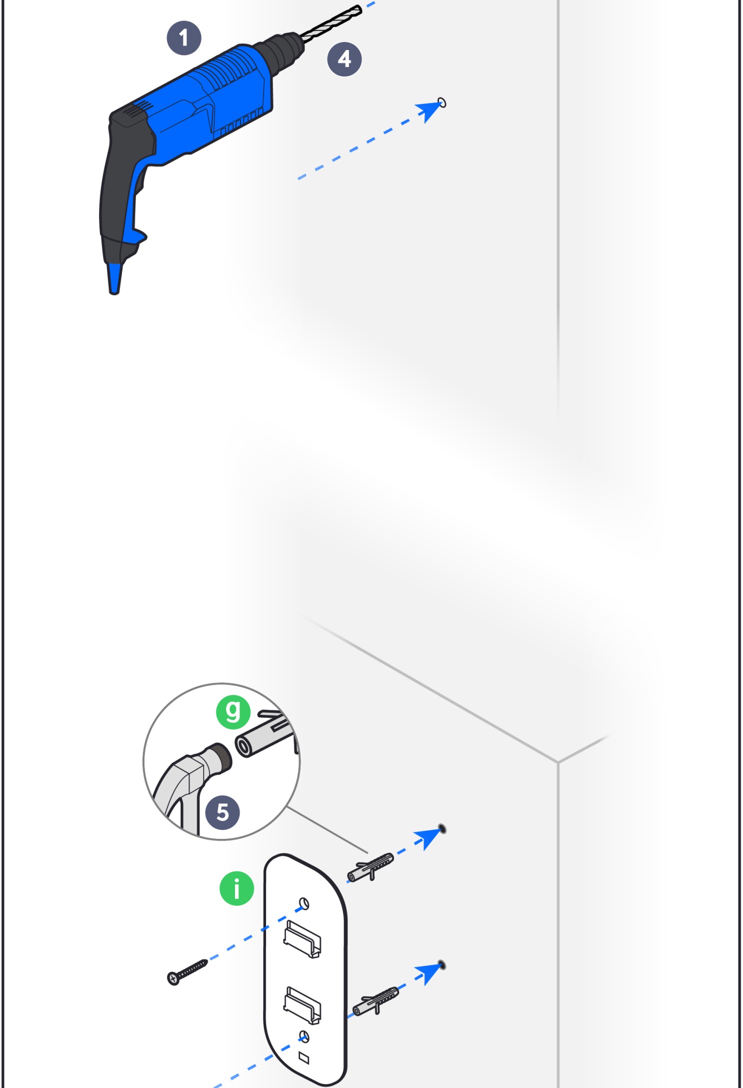

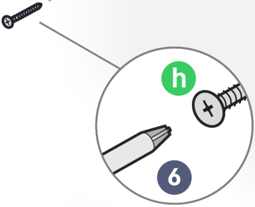

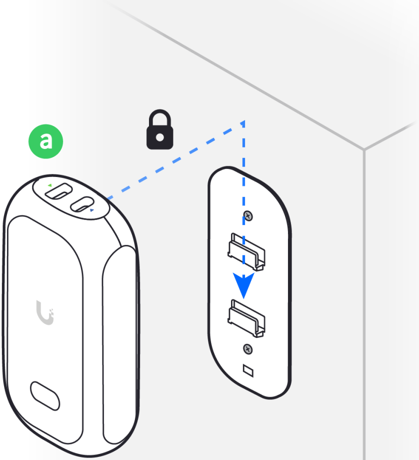

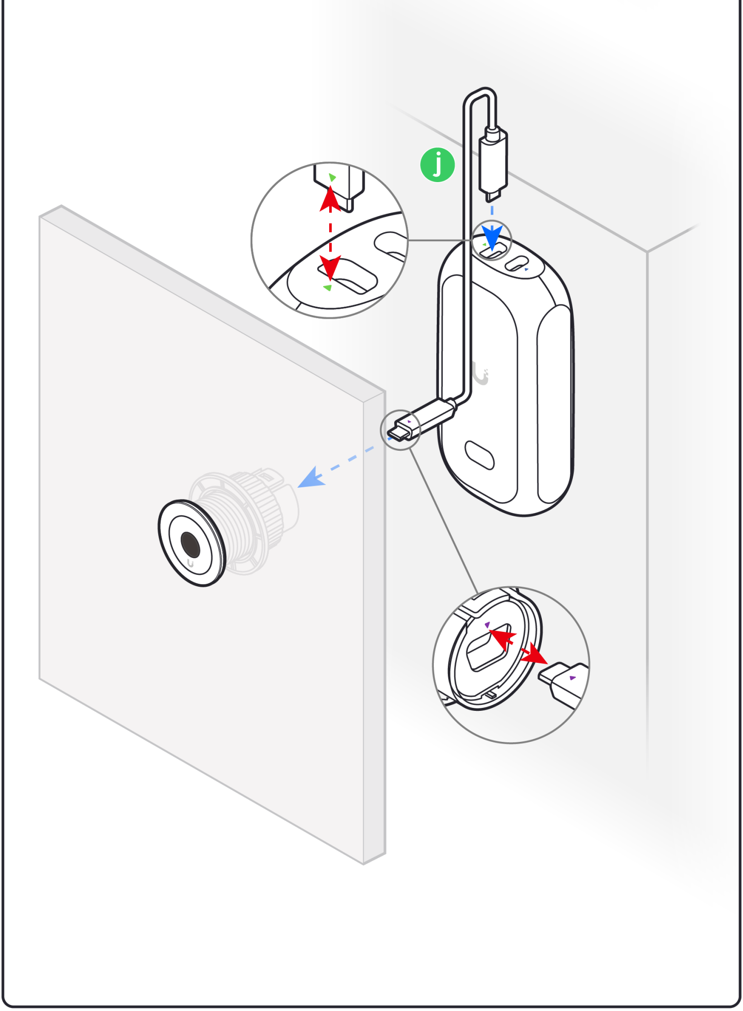

2

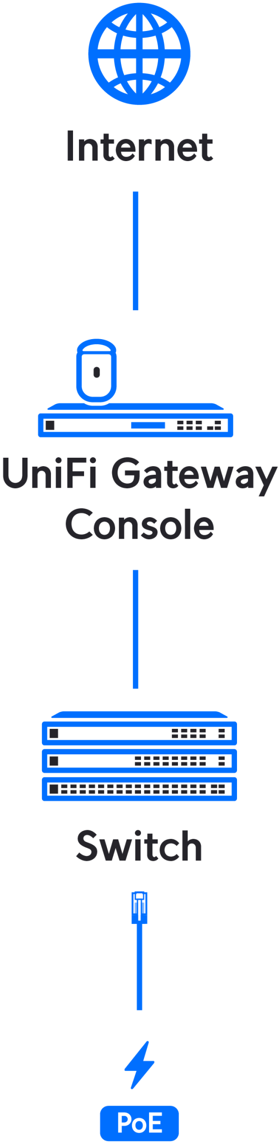
Internet
UniFi Gateway Console
Switch
PoE

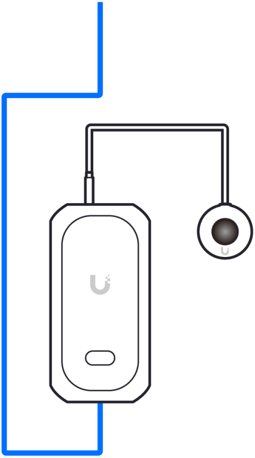

3

Download on the App Store

GET IT ON Google Play

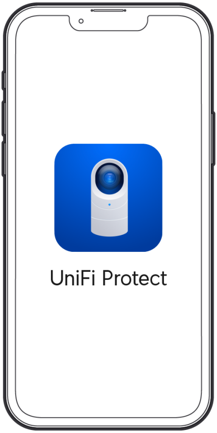
UniFi Protect

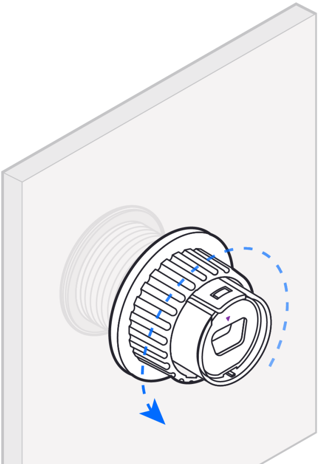

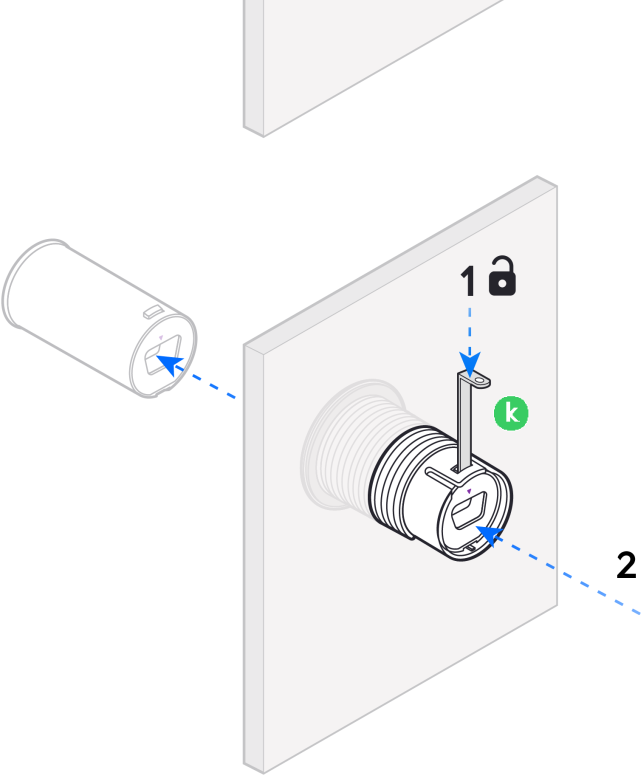

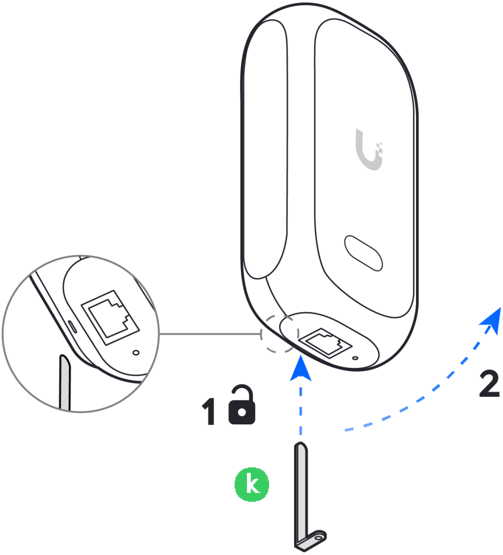

AI Theta Camera Angle Mount

Coming Soon

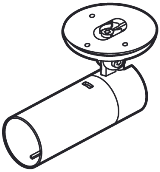

AI Theta Cam Long Range

Coming Soon

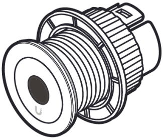

AI Theta Audio

Buy ›

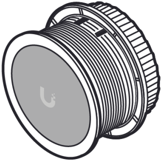

If you need further assistance, visit our Help Center or contact Ubiquiti Support.

©2022 Ubiquiti Inc. All rights reserved. Ubiquiti, Ubiquiti Networks, the Ubiquiti U logo, UniFi, UniFi Protect, and Theta are trademarks or registered trademarks of Ubiquiti Inc. in the United States and in other countries. App Store and the Apple logo are trademarks of Apple Inc., registered in the U.S. and other countries. Google Play and the Google Play logo are trademarks of Google LLC. All other trademarks are the property of their respective owners.