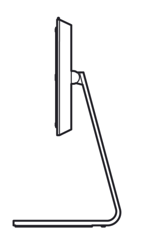

A

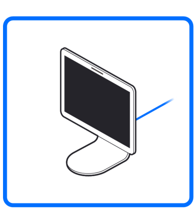

Connect Display

Buy ›

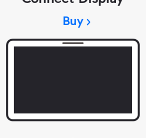

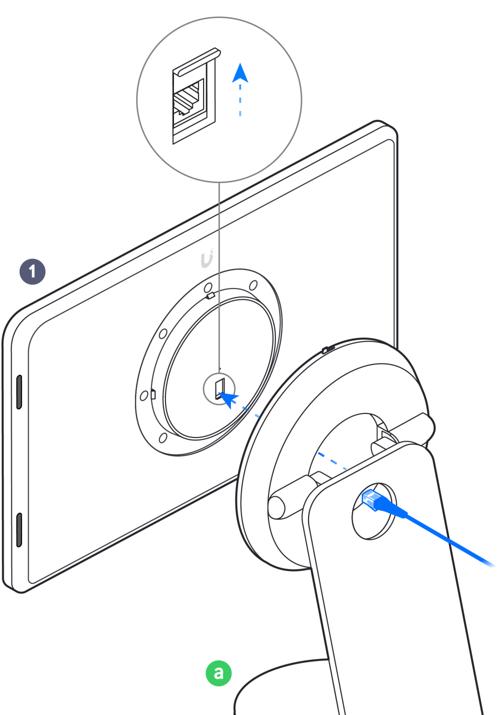

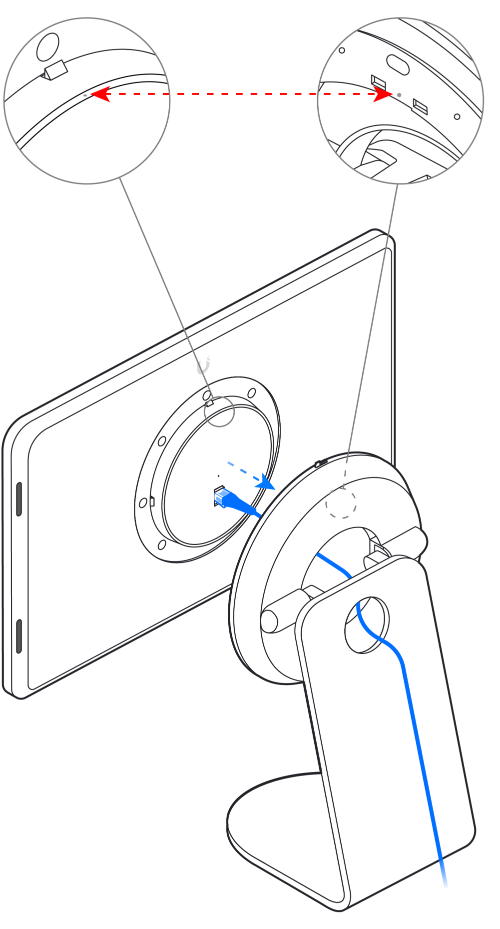

B

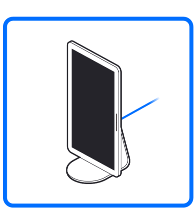

Connect Display

Buy ›

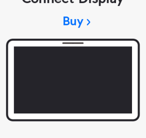

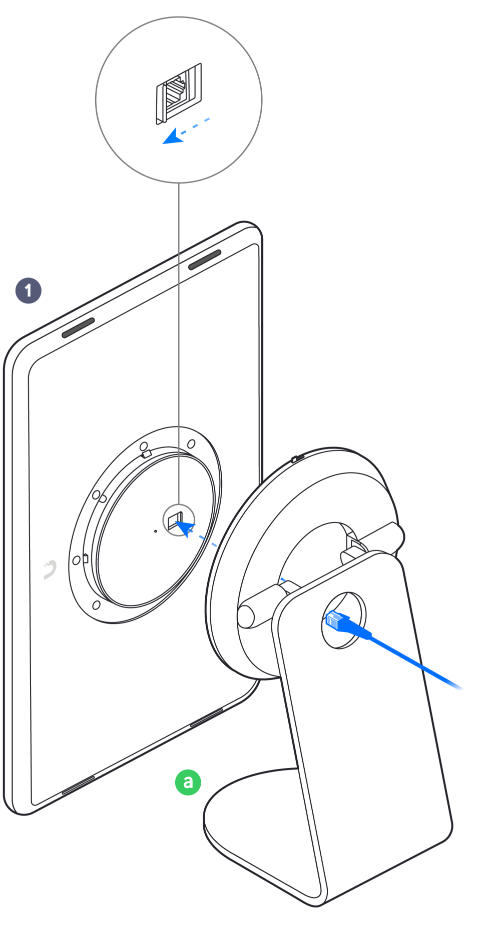

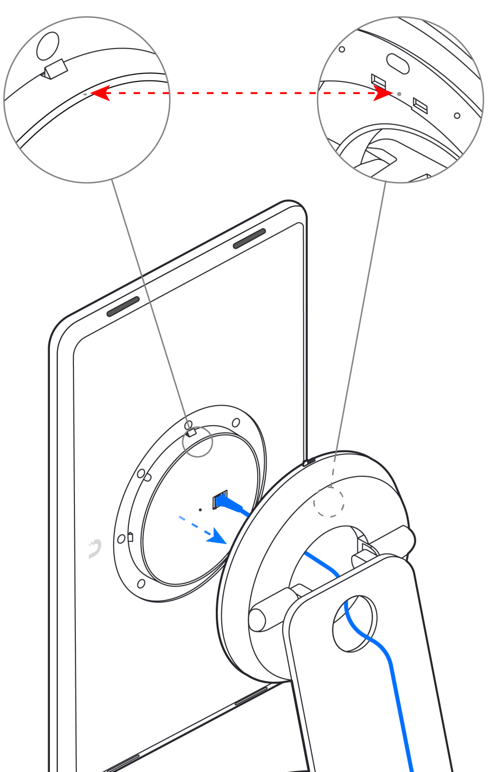

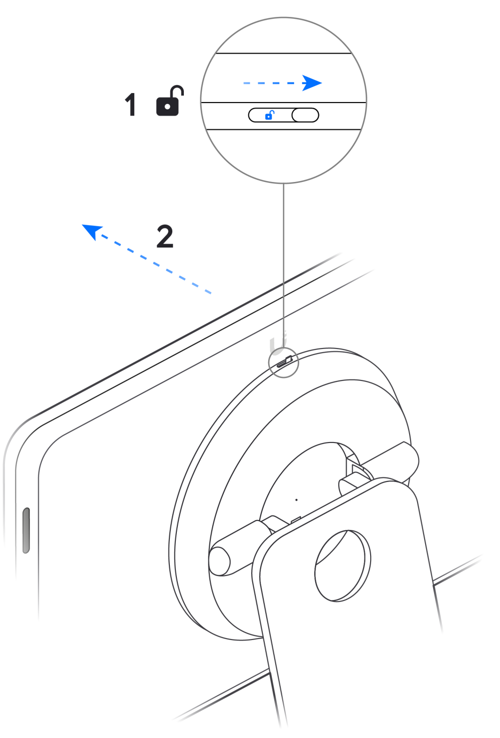

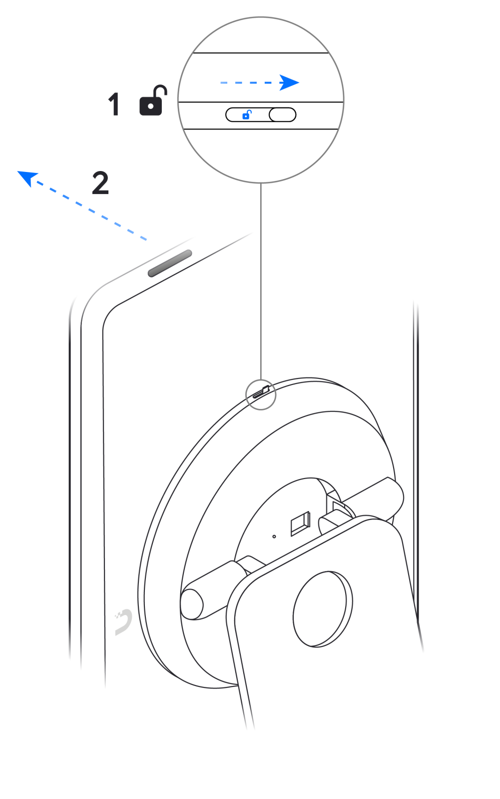

Get Answers
help.ui.com

UI Support

©2022 Ubiquiti Inc. All rights reserved. Ubiquiti, Ubiquiti Networks, the Ubiquiti U logo, UniFi, and UniFi Connect are trademarks or registered trademarks of Ubiquiti Inc. in the United States and in other countries. All other trademarks are the property of their respective owners.