Display Flush Mount

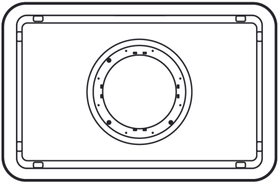

a

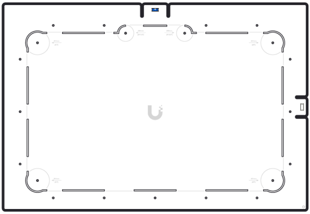

b

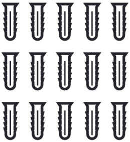

c

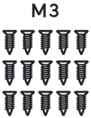

d

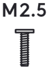

e

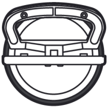

f

1

A

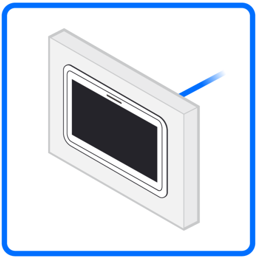

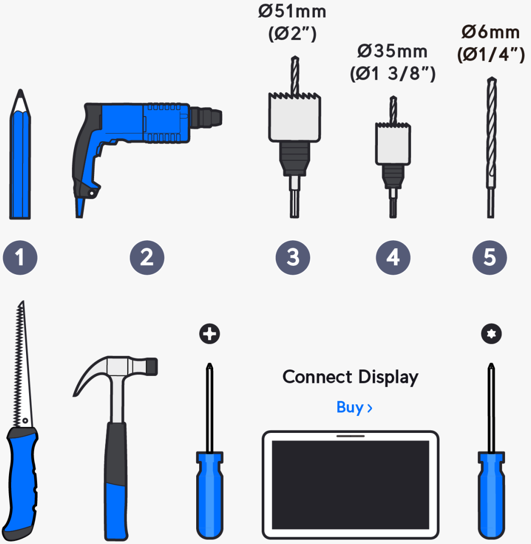
Ø51mm
(Ø2”)
Ø35mm
(Ø1 3/8”)
Ø6mm
(Ø1/4”)
1
2
3
4
5
⊕
✱
Connect Display
Buy ›

⑥ ⑦ ⑧ ⑨ ⑩

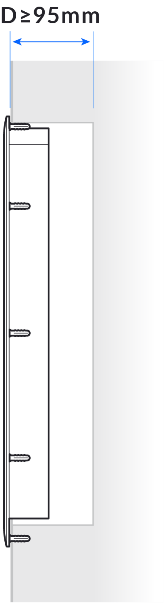

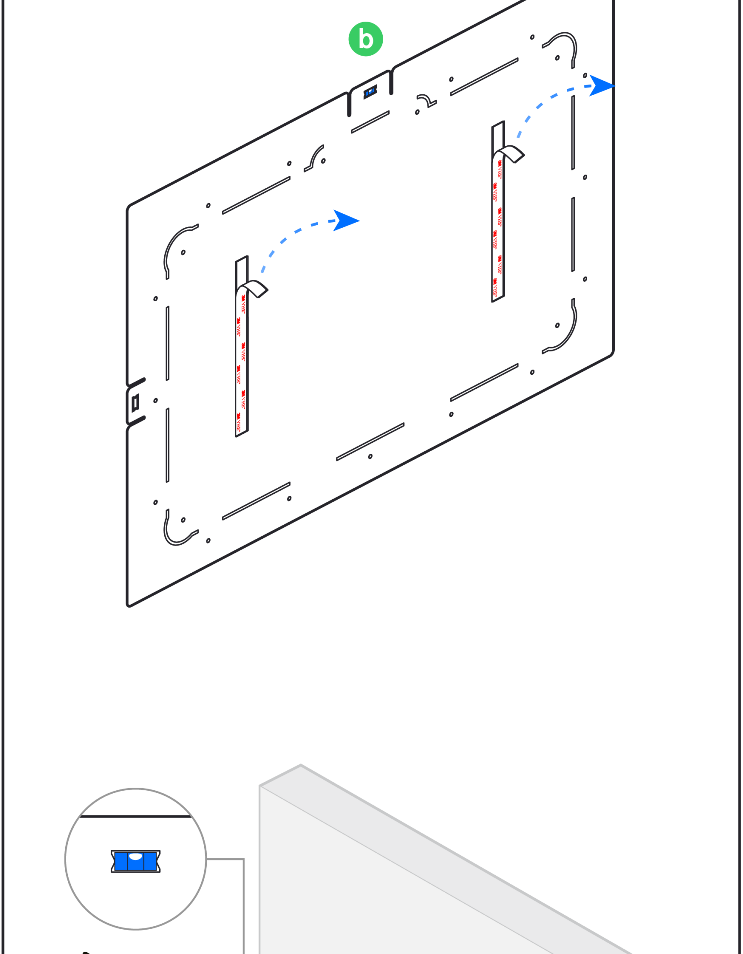
b
3M VHB
3M VHB

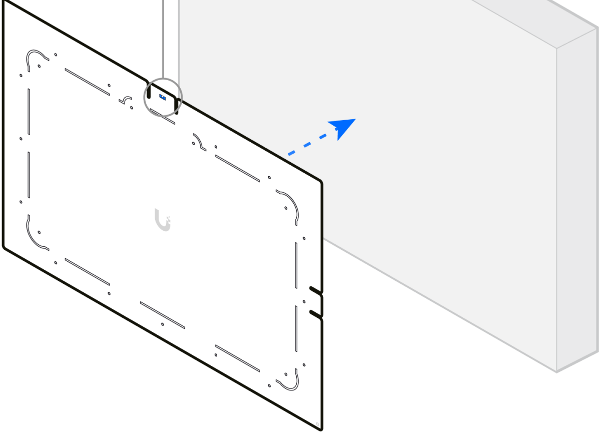

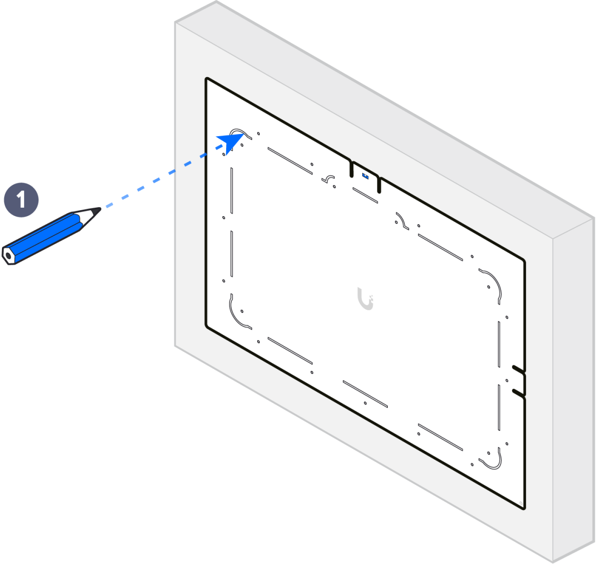

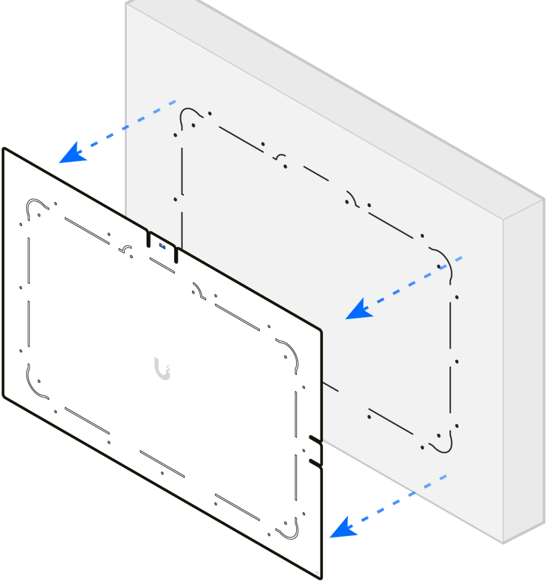

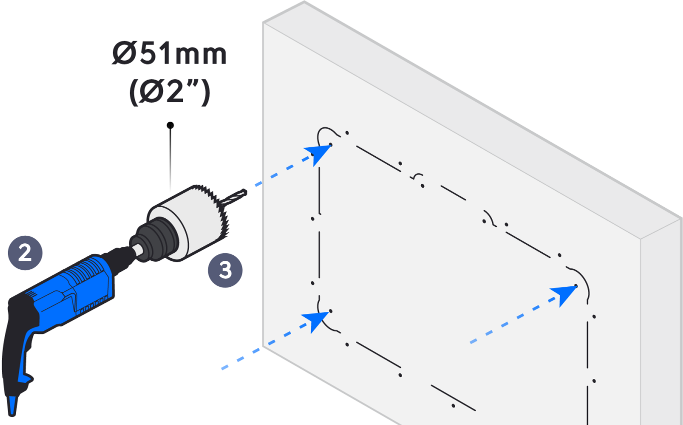

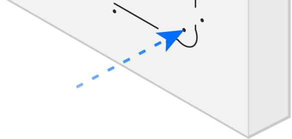

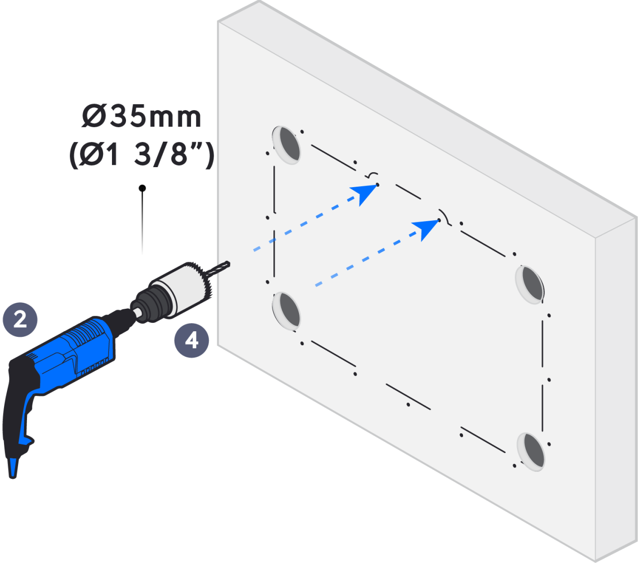
Ø35mm
(Ø1 3/8”)
2
4

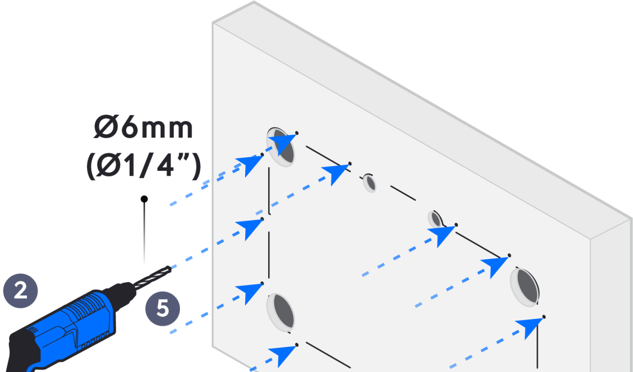

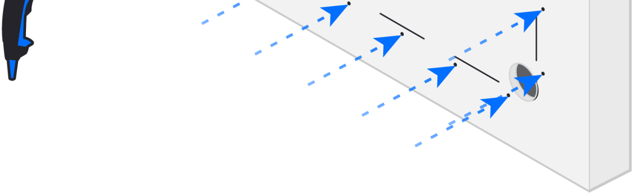

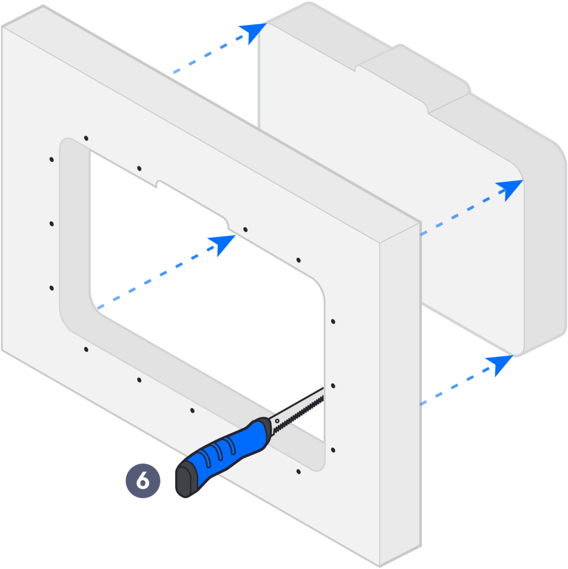

a

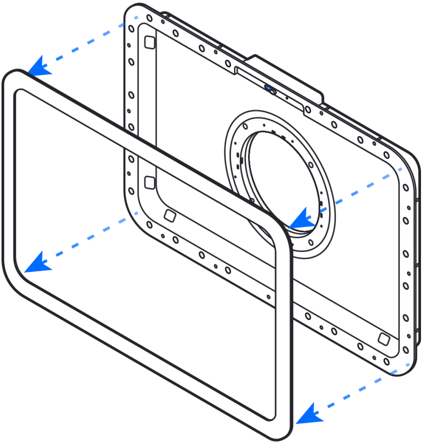

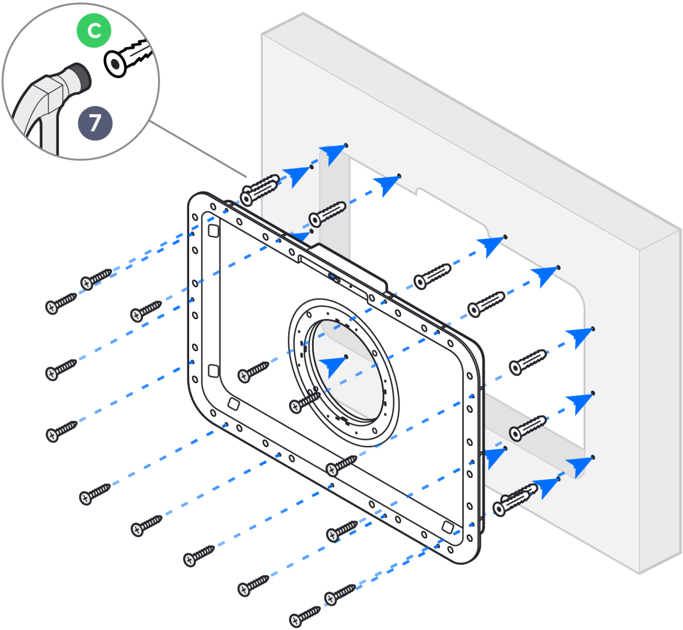

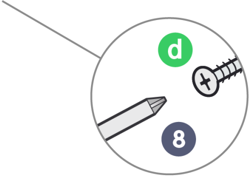

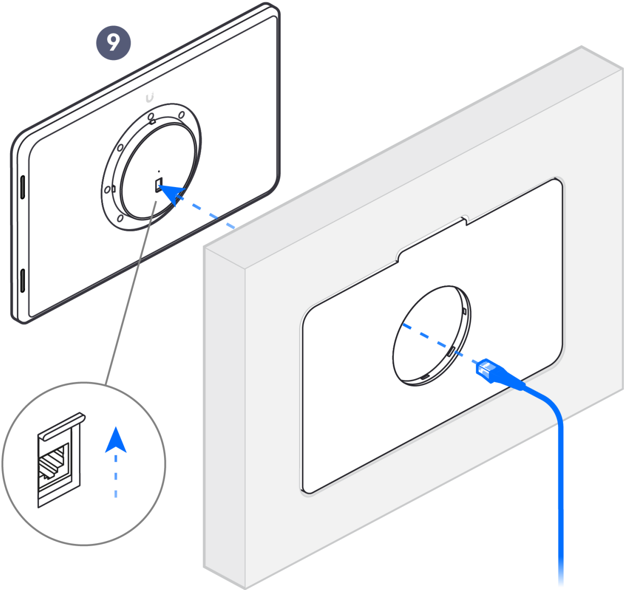

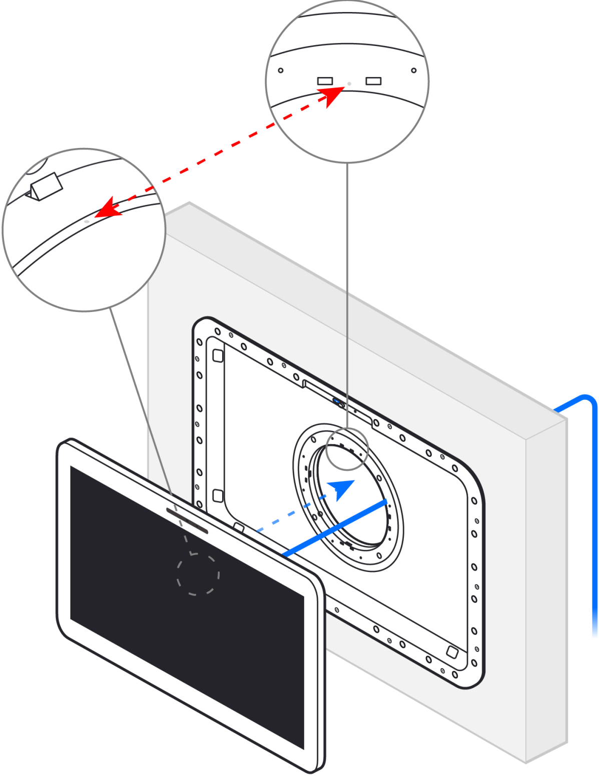

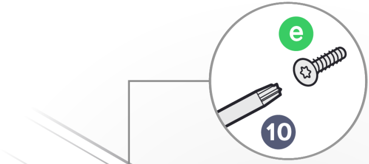

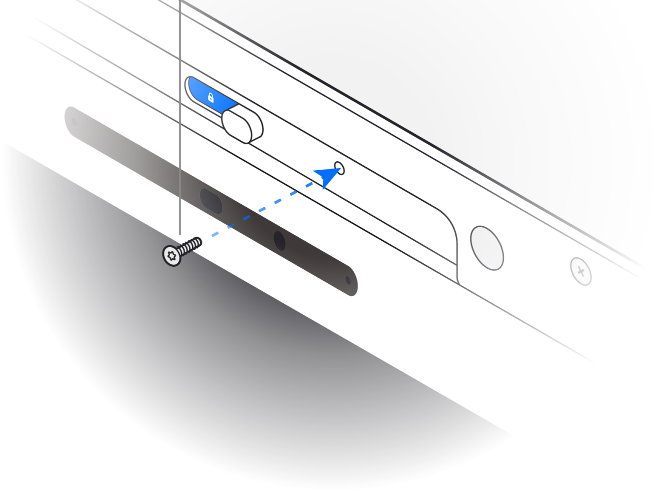

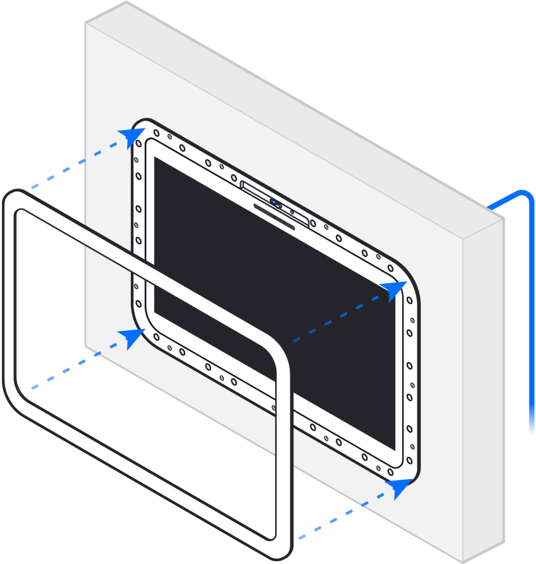

B

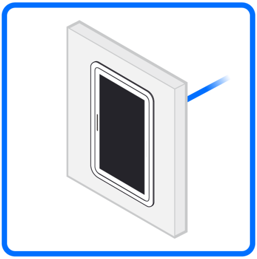

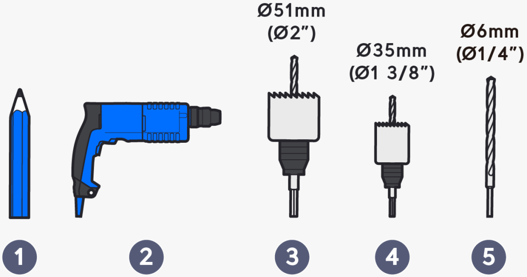
Ø51mm
(Ø2”)
Ø35mm
(Ø1 3/8”)
Ø6mm
(Ø1/4”)
①
②
③
④
⑤

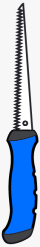

⑥

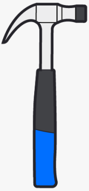

⑦

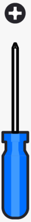

⑧

Connect Display

Buy ›

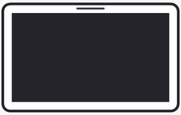

⑨

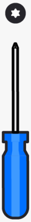

⑩

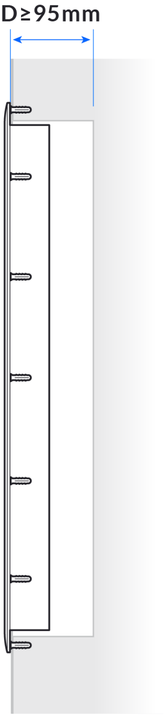

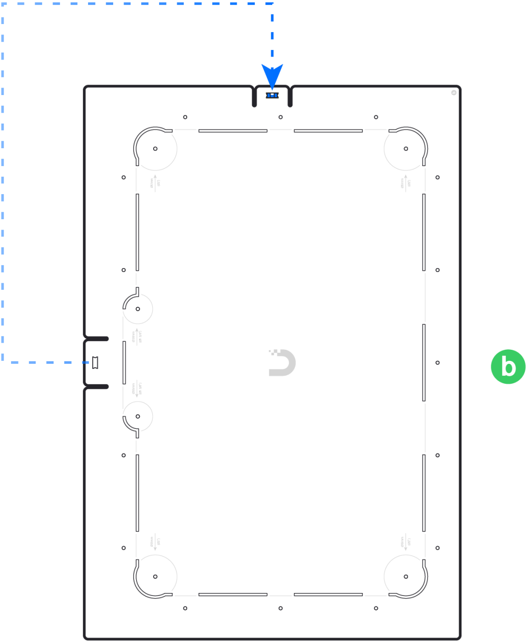

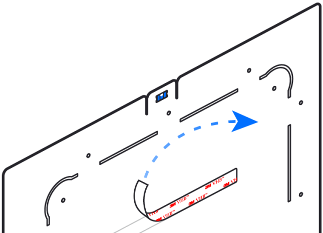

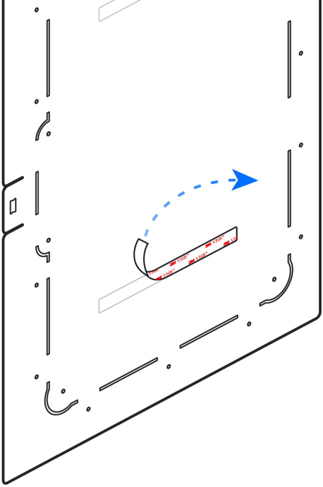

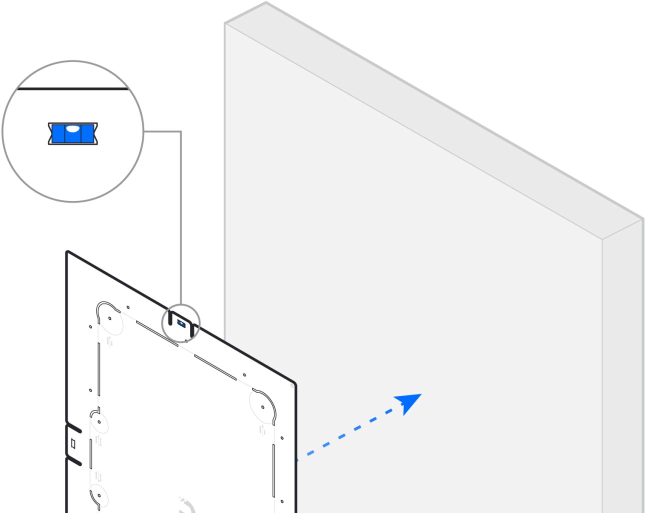

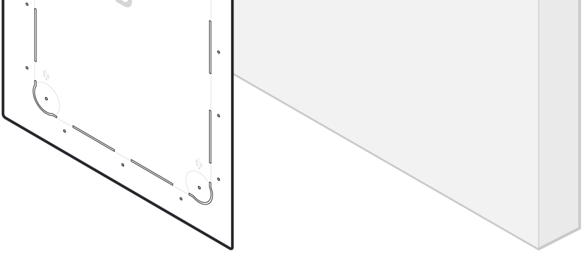

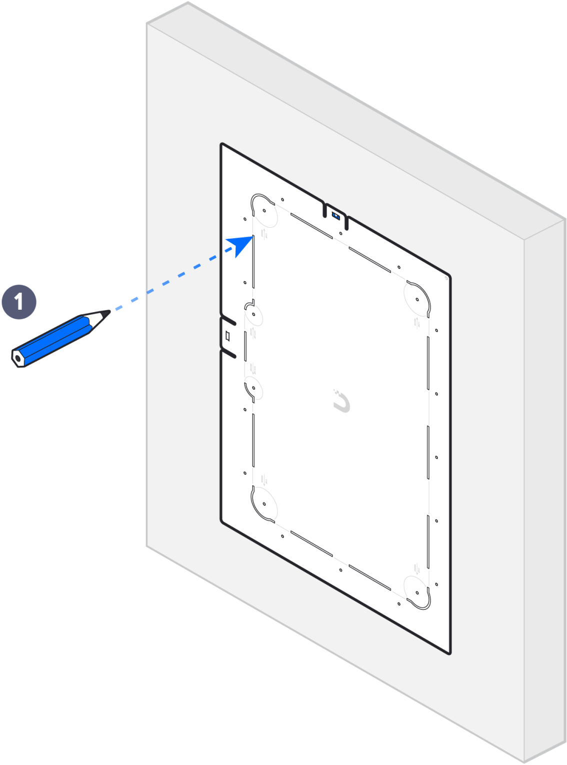

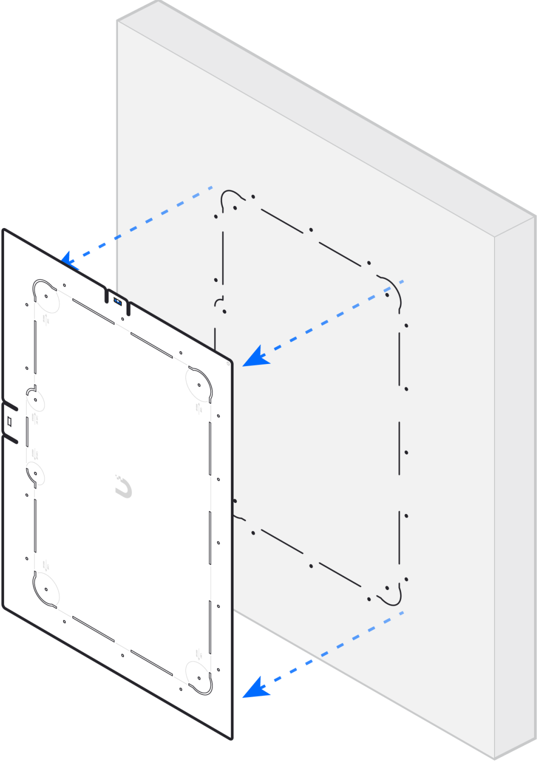

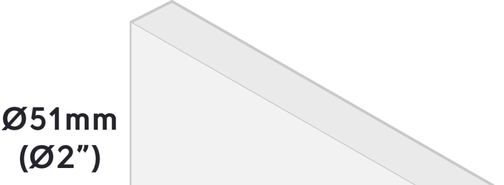

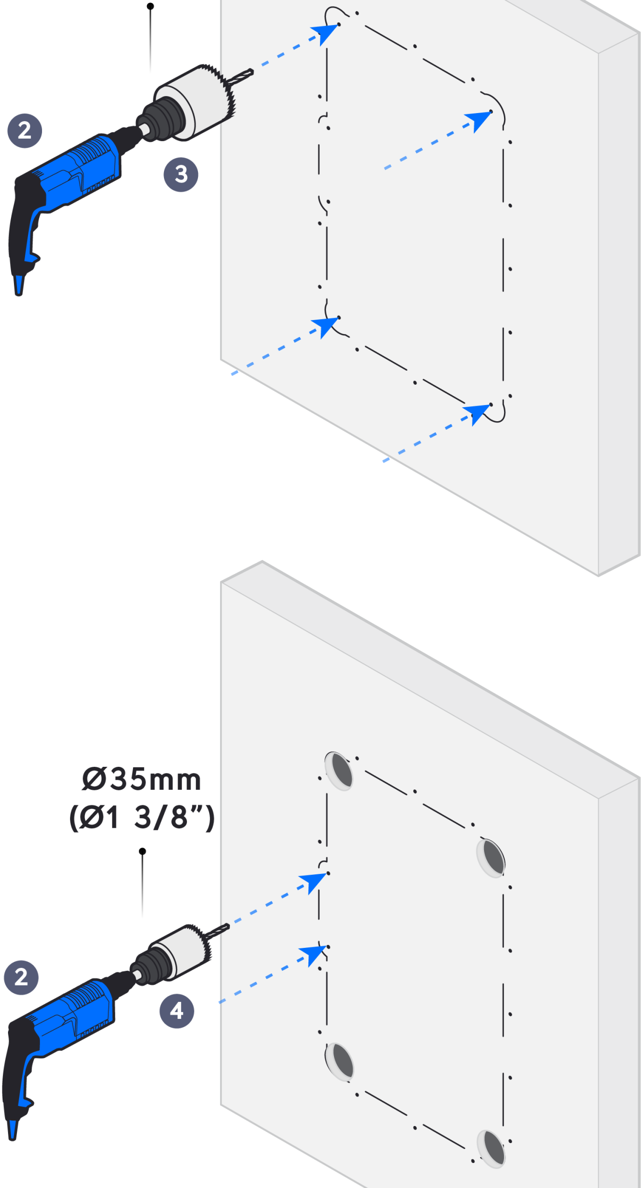
2
3
Ø35mm
(Ø1 3/8")
2
4

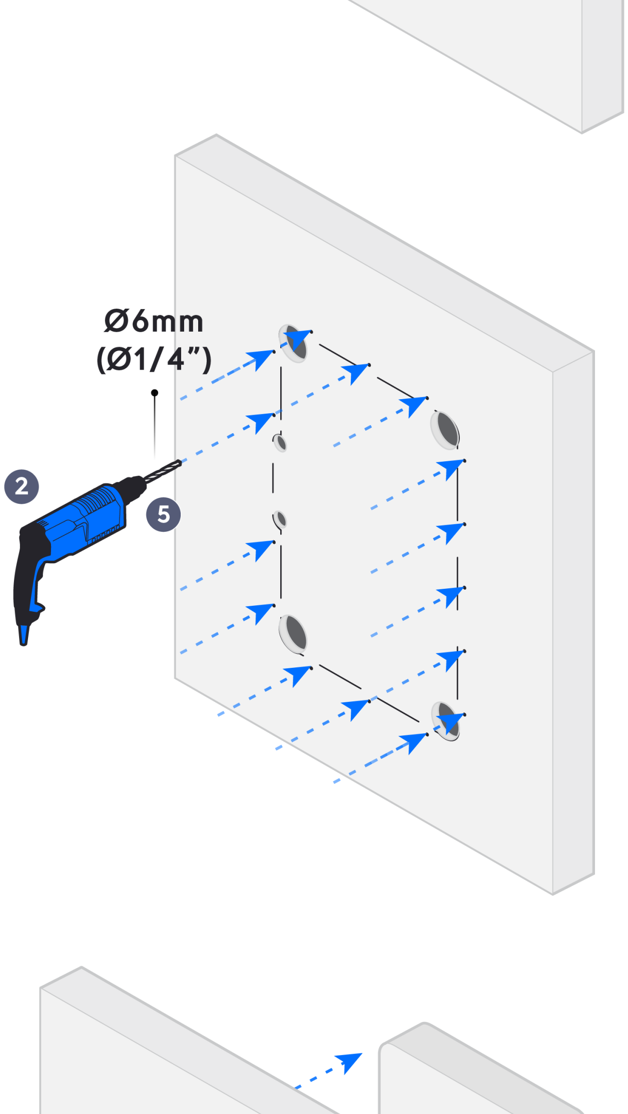

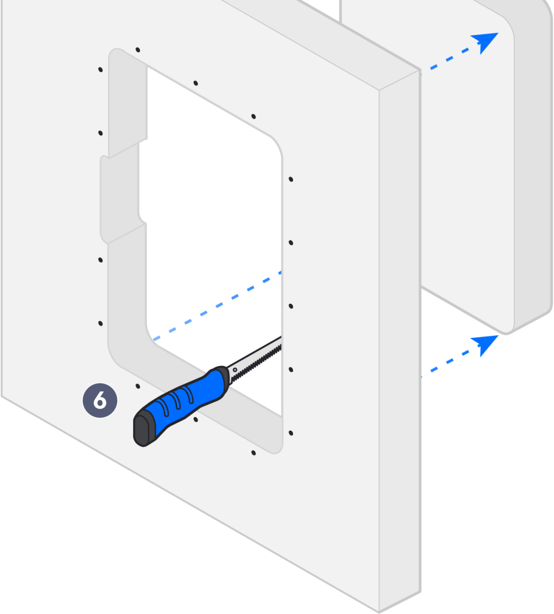

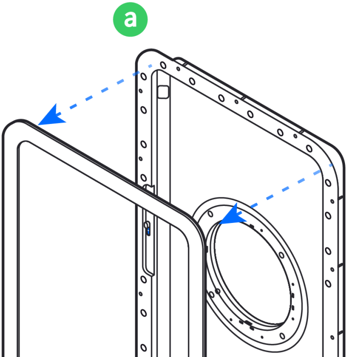

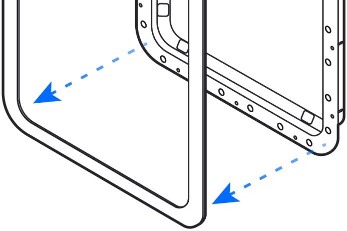

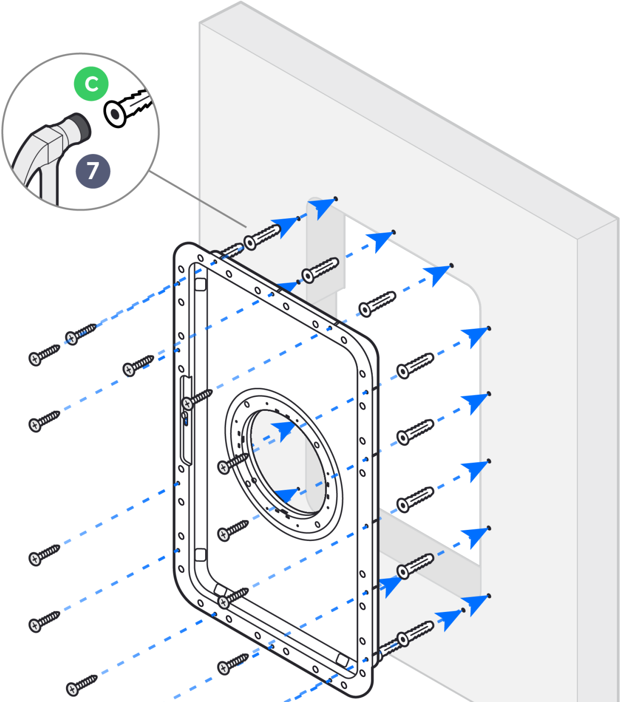

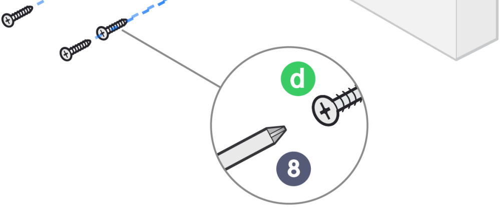

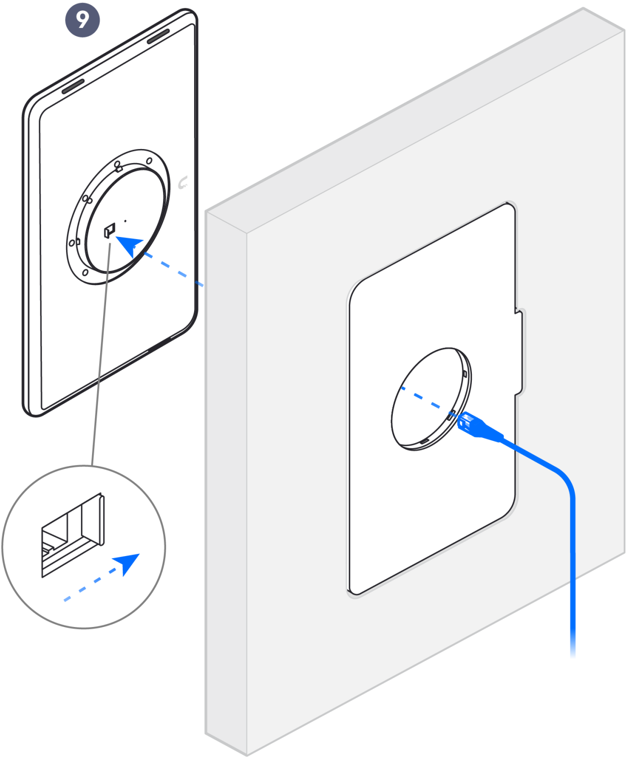

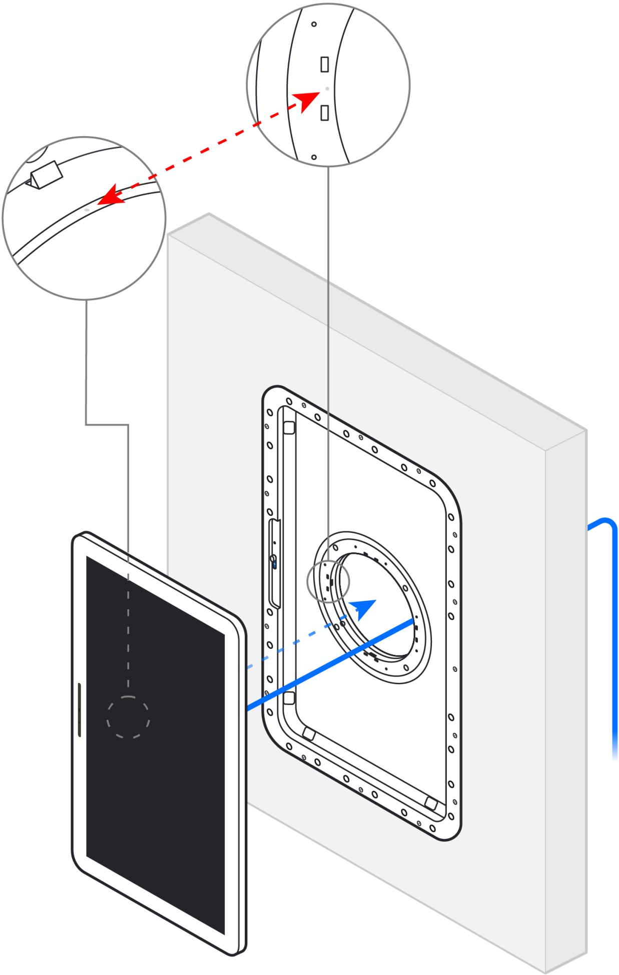

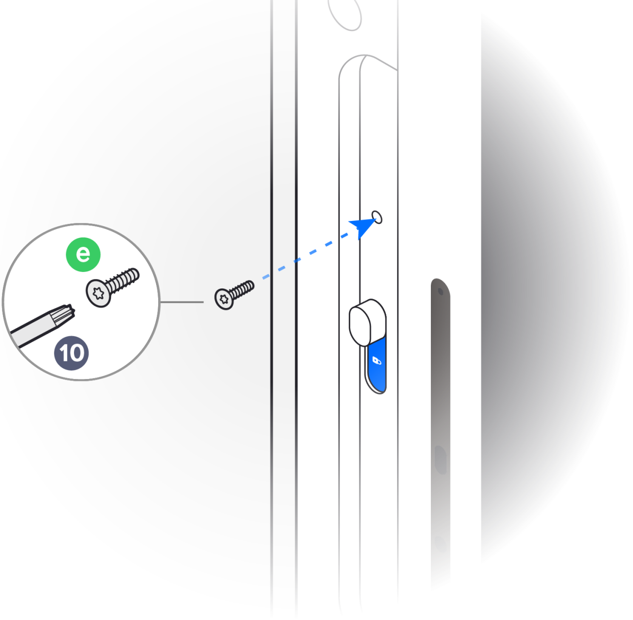

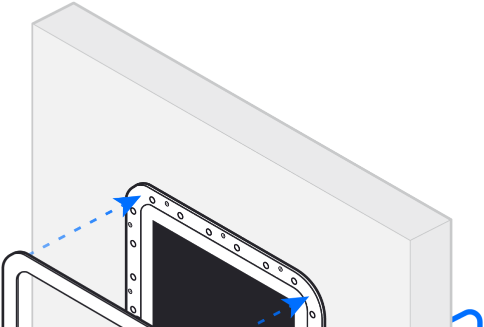

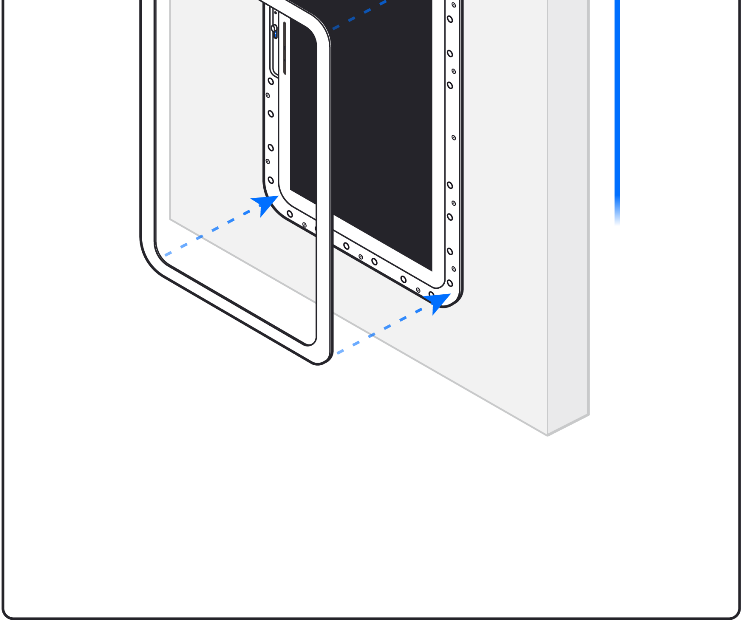

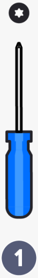

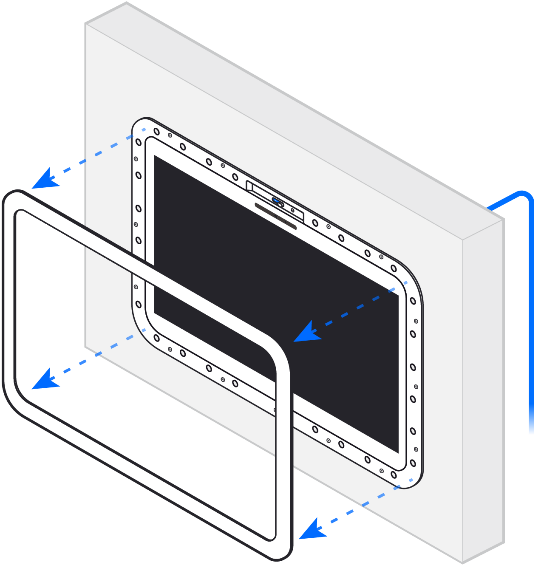

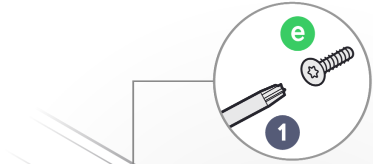

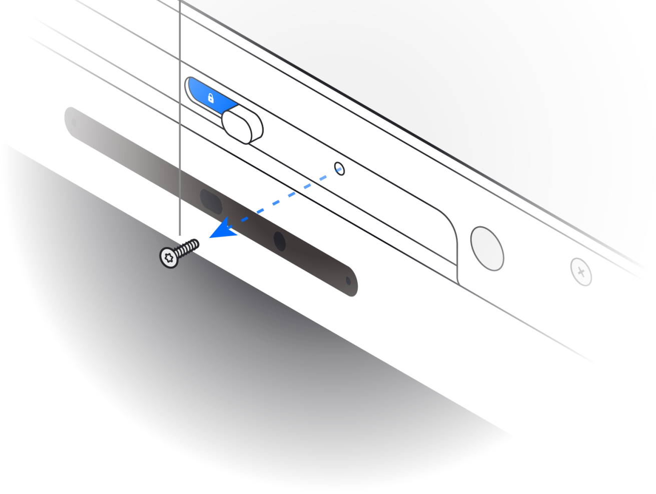

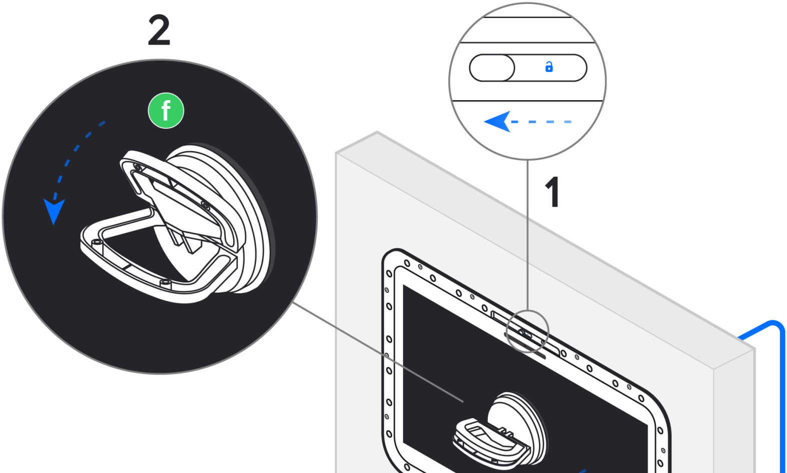

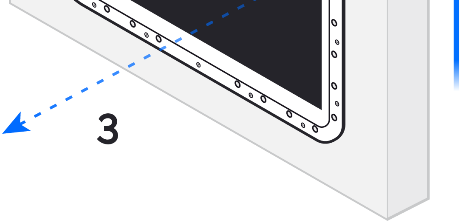

Get Answers

help.ui.com

UI Support

©2022 Ubiquiti Inc. All rights reserved. Ubiquiti, Ubiquiti Networks, the Ubiquiti U logo, UniFi, and UniFi Connect are trademarks or registered trademarks of Ubiquiti Inc. in the United States and in other countries.
All other trademarks are the property of their respective owners.