Display Arm Mount

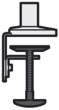
a

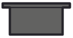
b

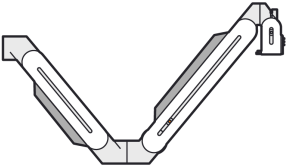
c

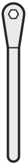
d

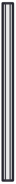
e

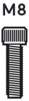

f

g

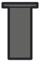
h

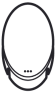
i

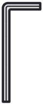
j

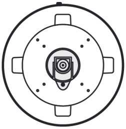
k

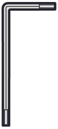
l

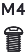

m

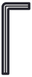
n

Connect Display

Buy ›

1

1

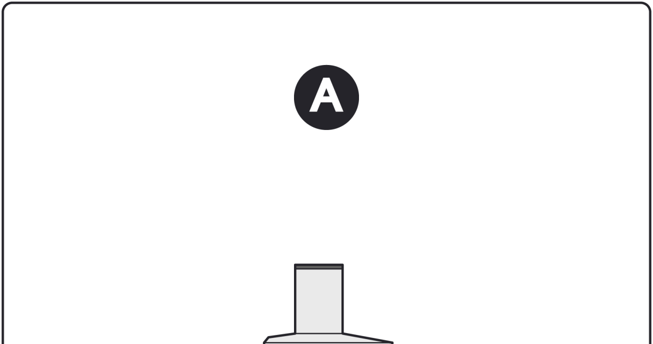

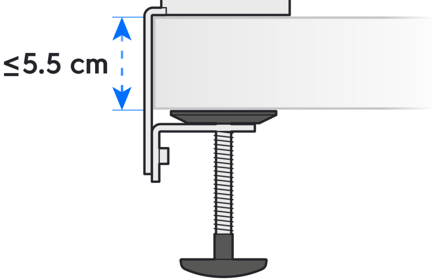

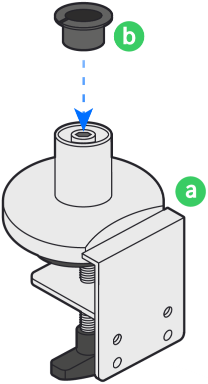

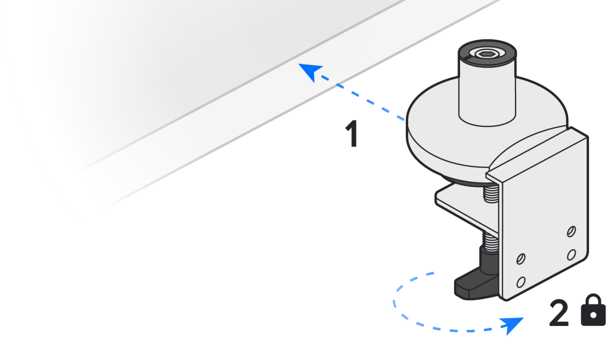

B

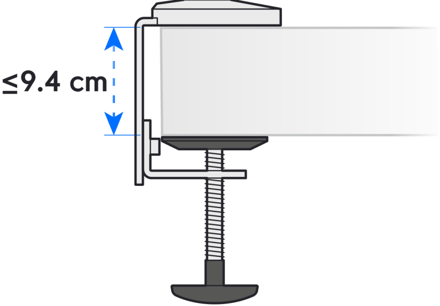

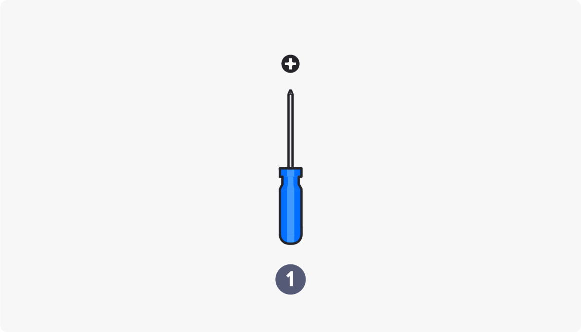

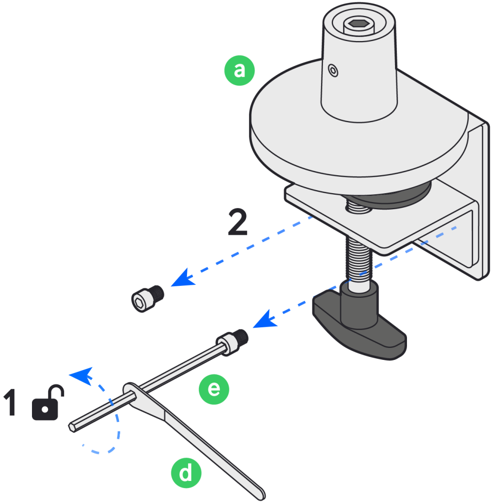

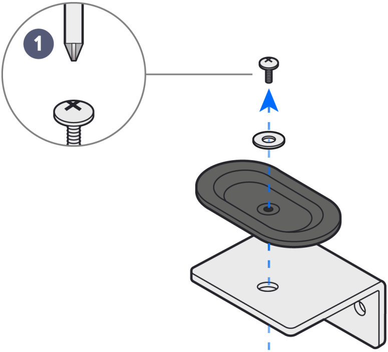

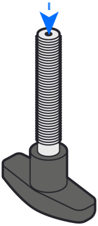

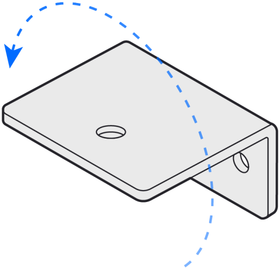

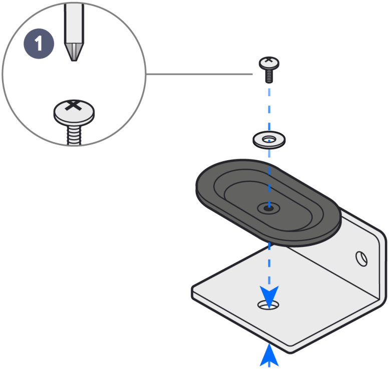

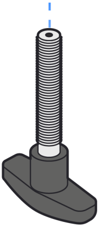

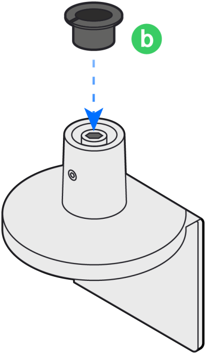

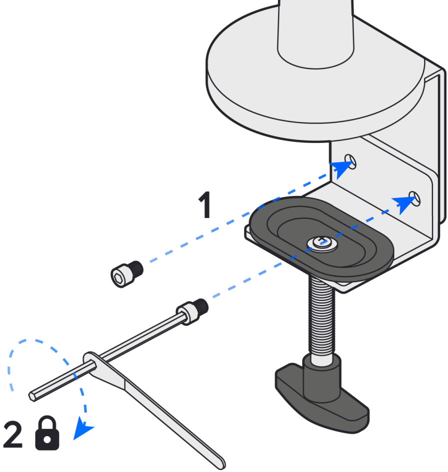

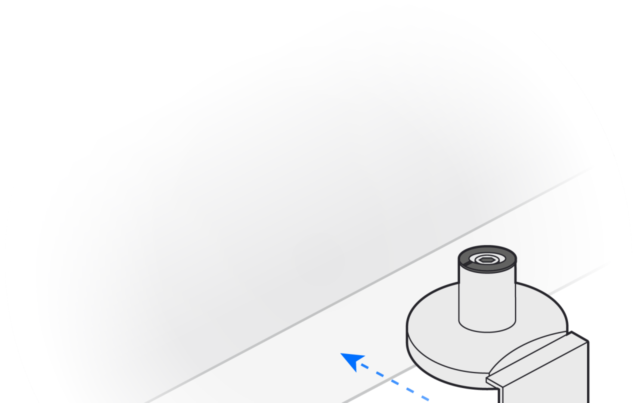

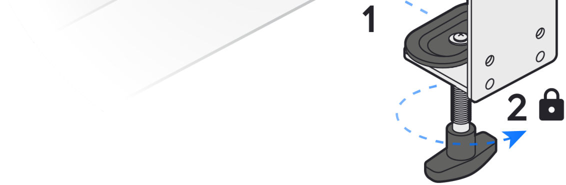

2

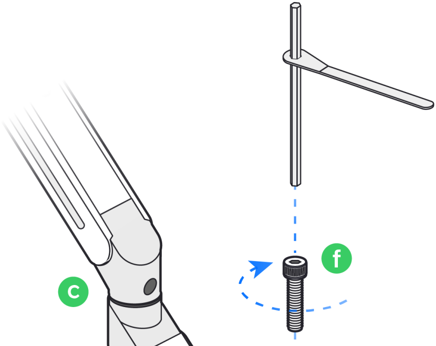

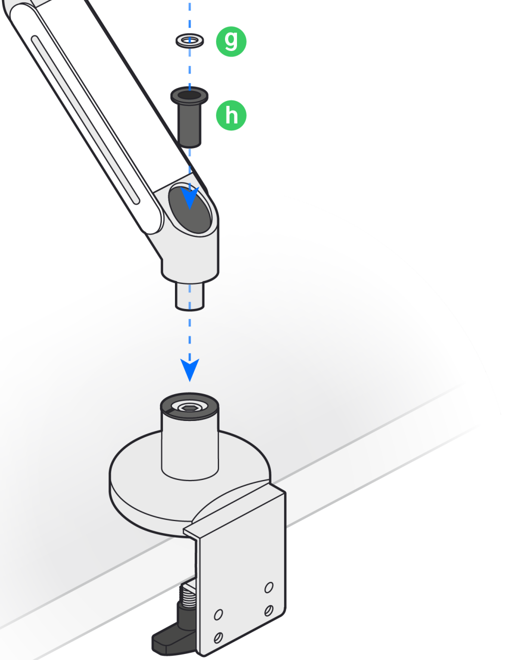

3

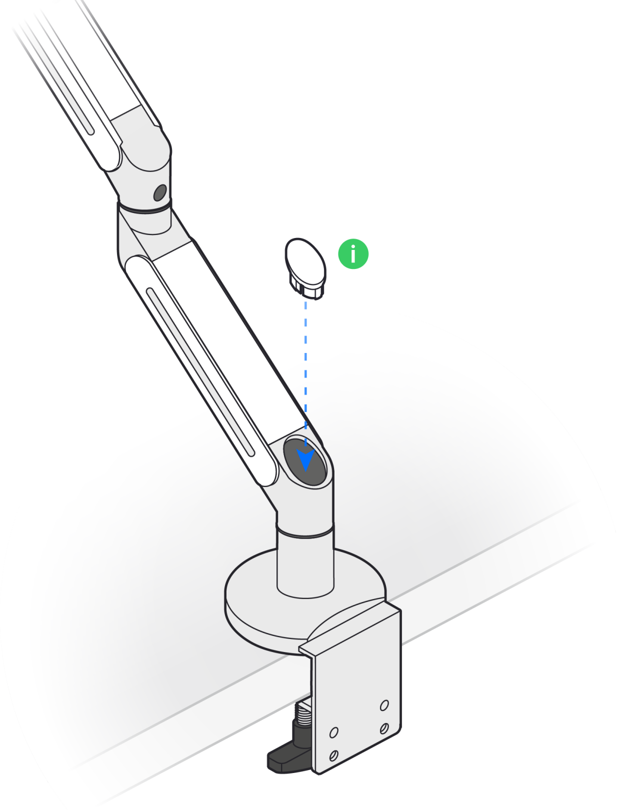

4

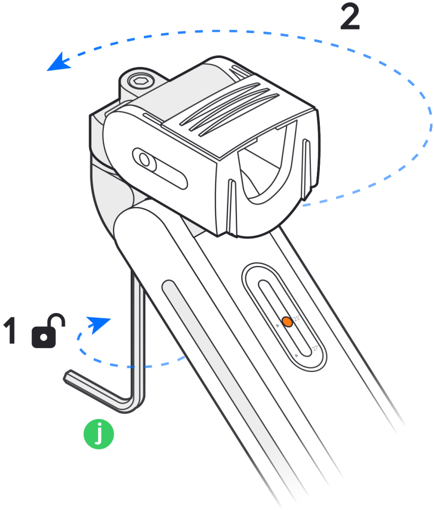

5

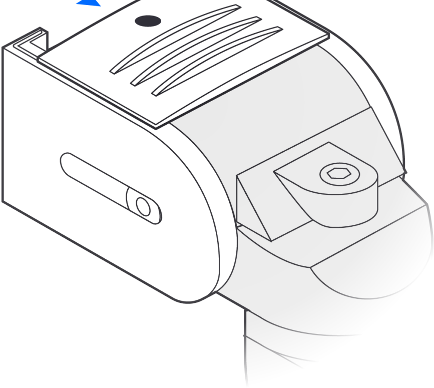

6

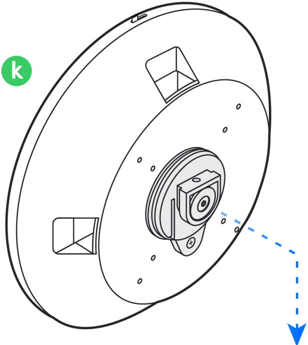

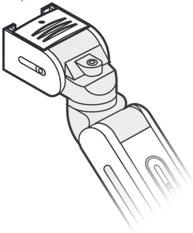

7

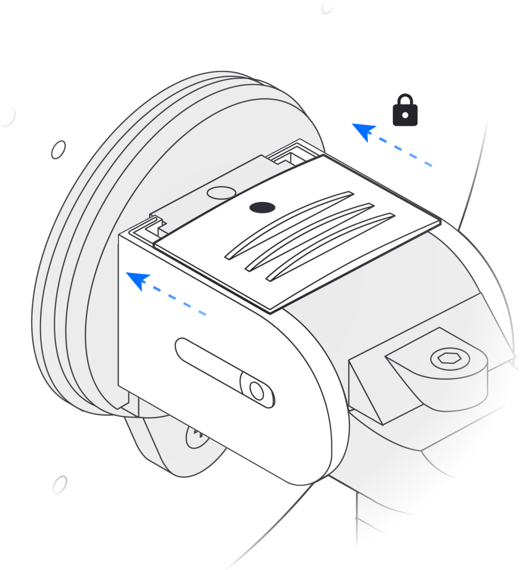

8

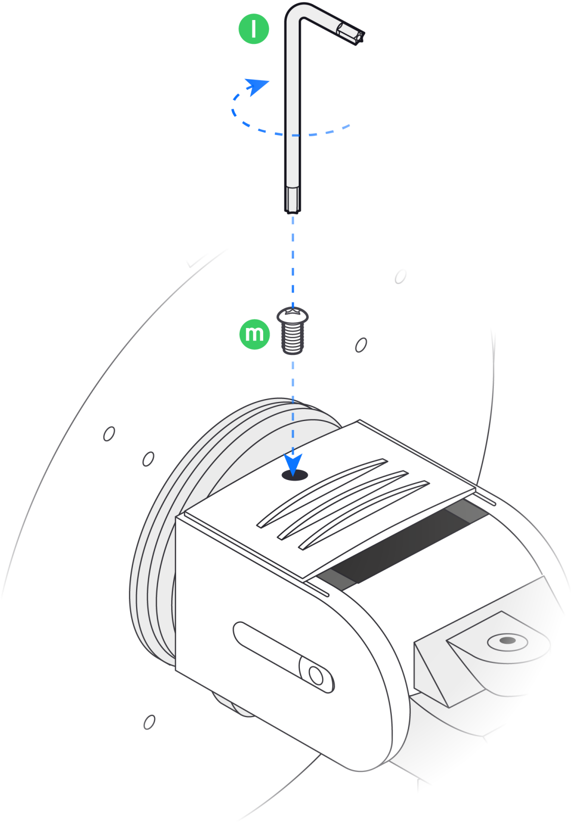

9

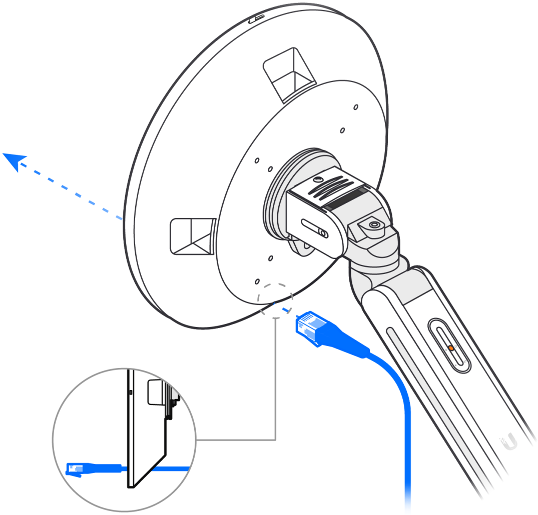

10

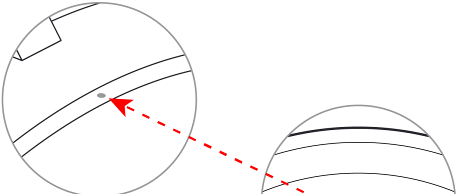

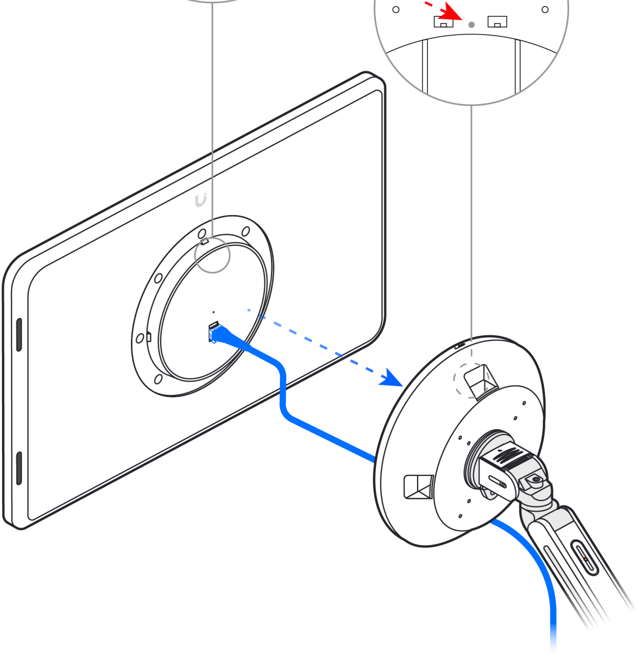

11

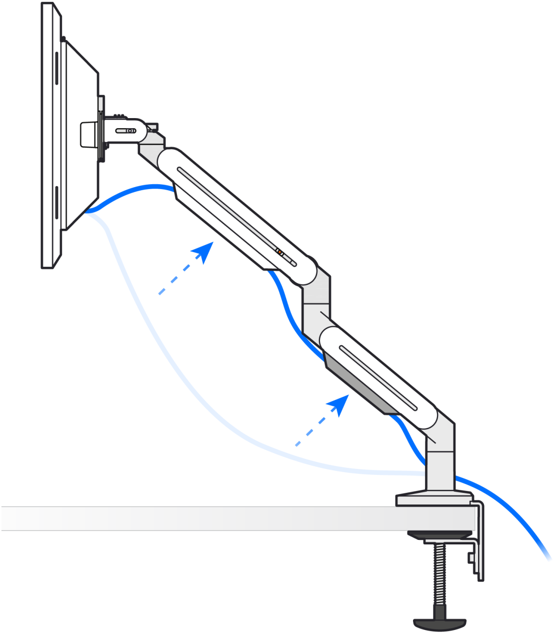

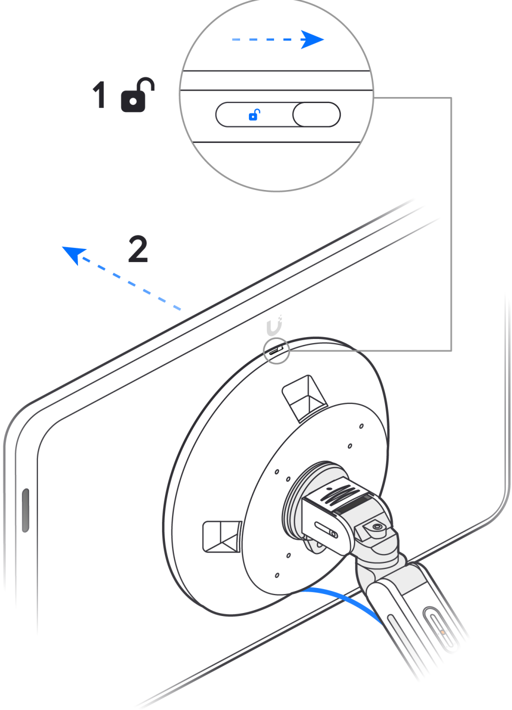

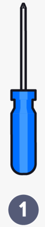

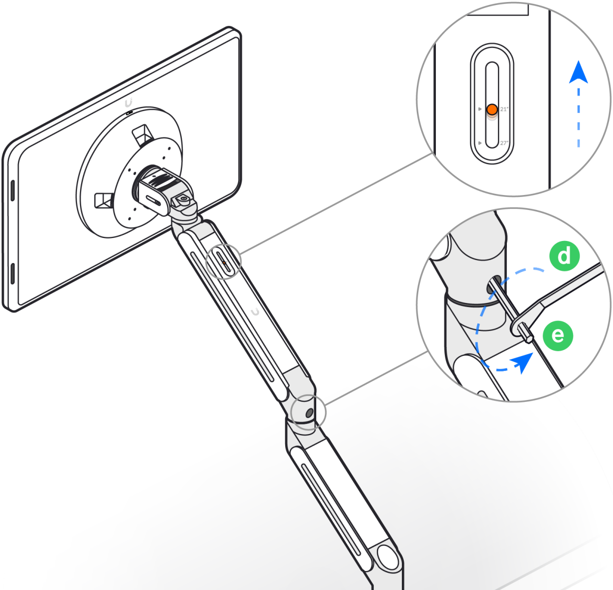

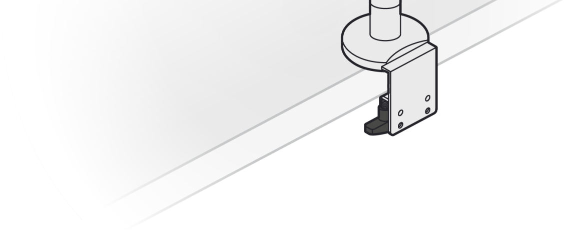

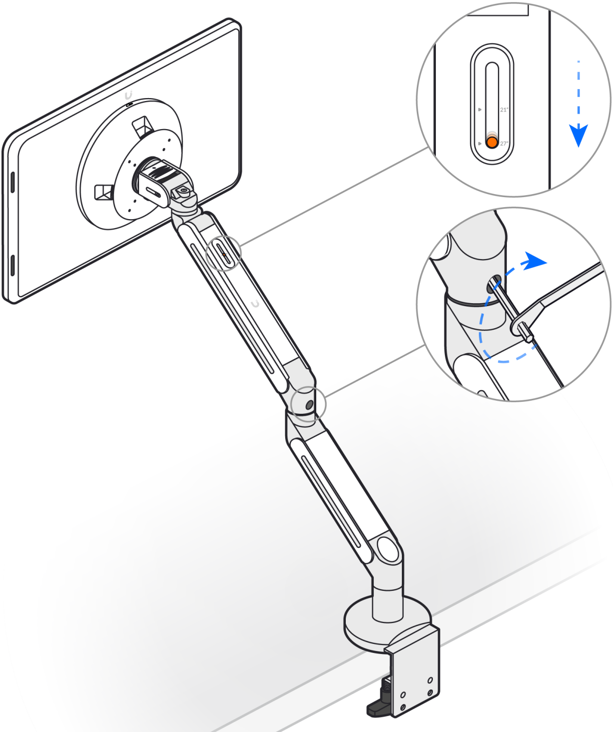

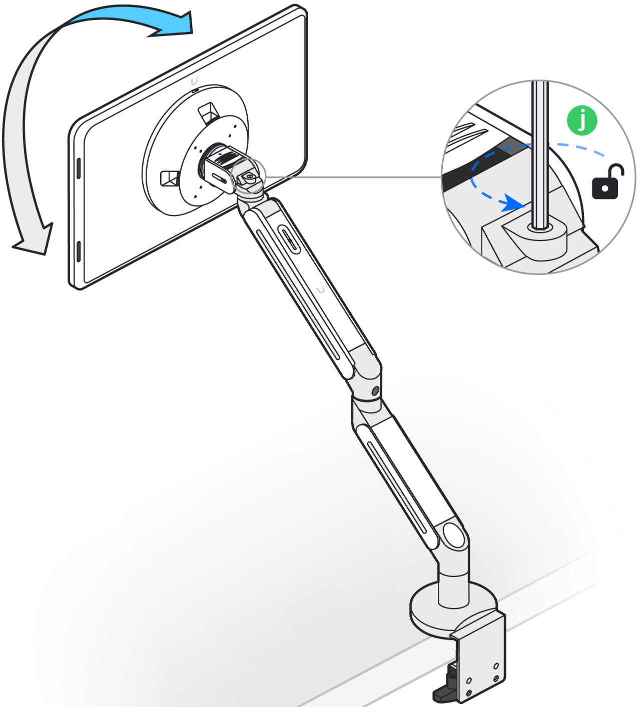

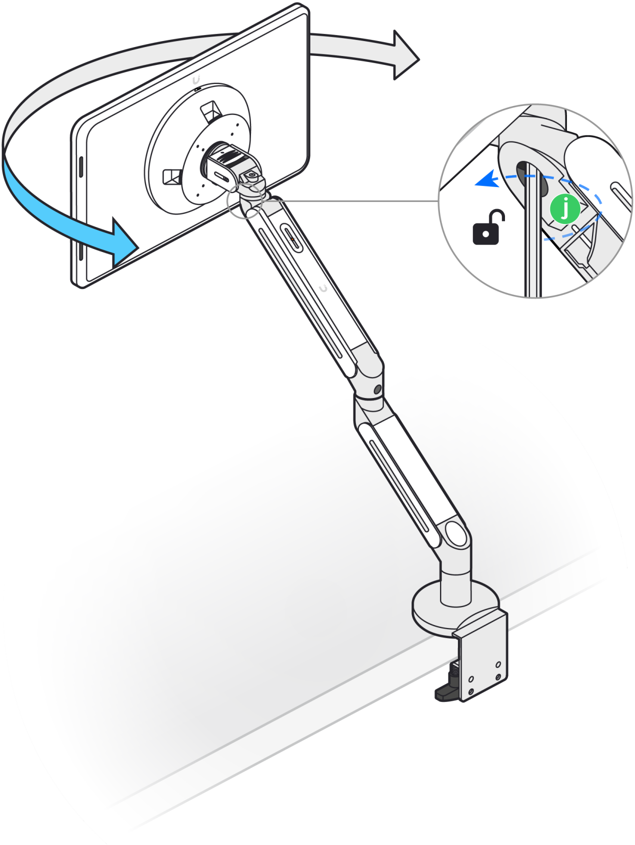

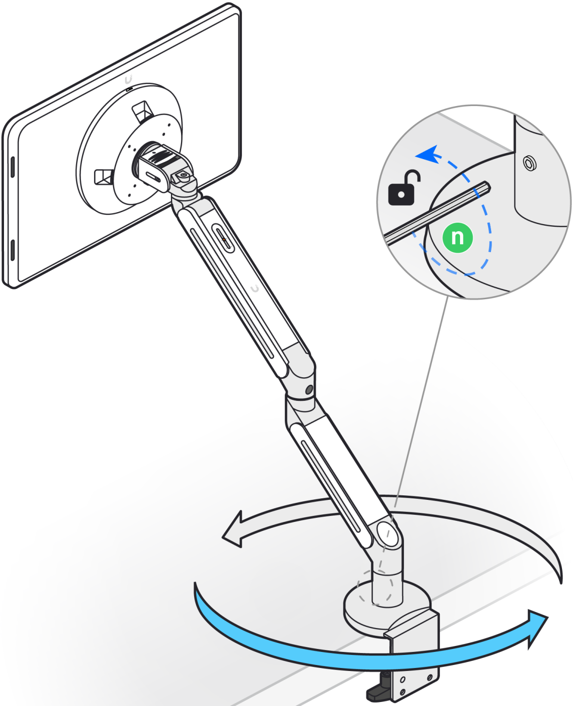

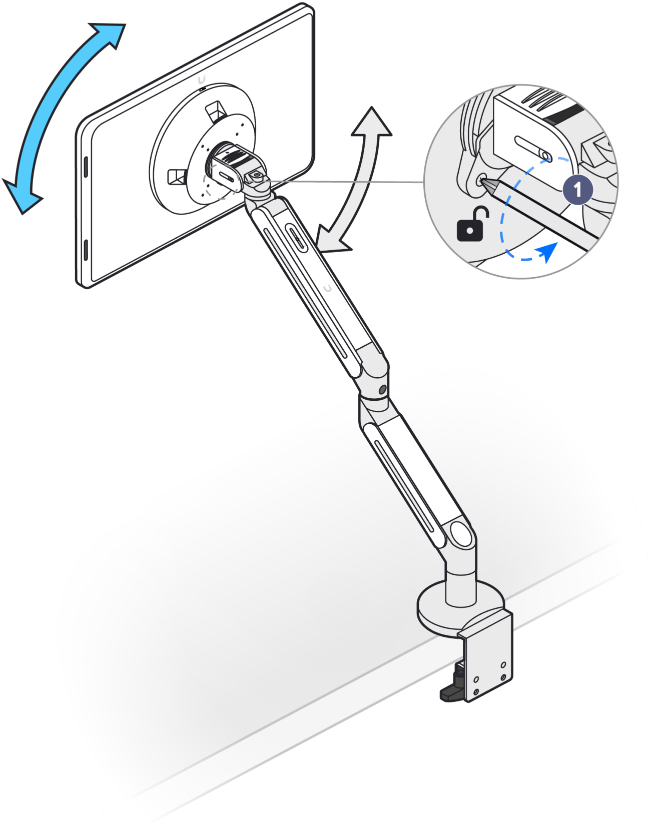

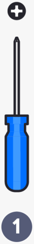

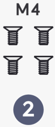

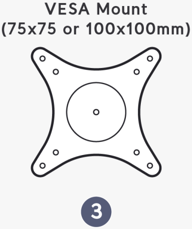
VESA Mount
(75x75 or 100x100mm)
③

1

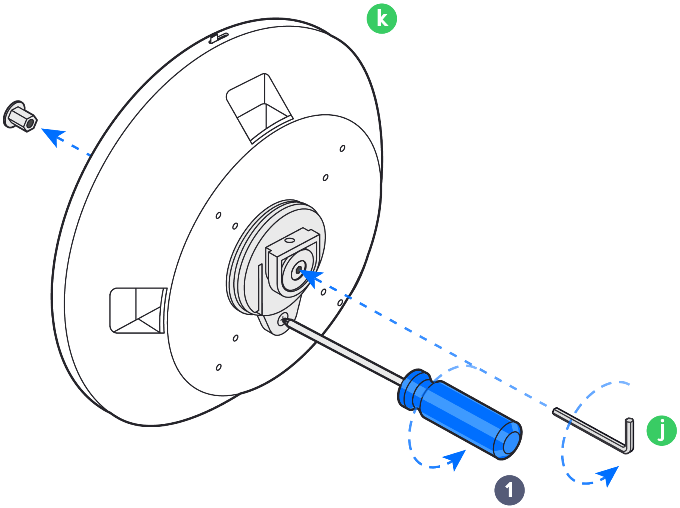

2

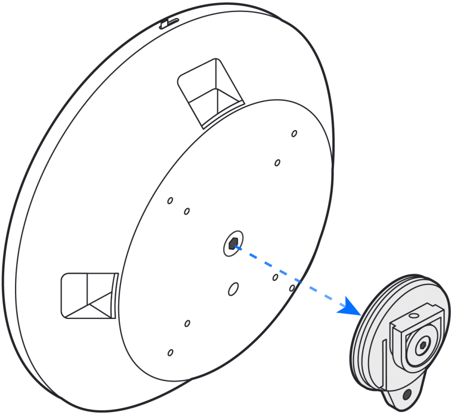

3

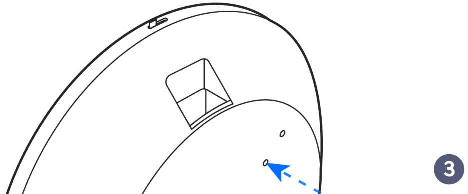

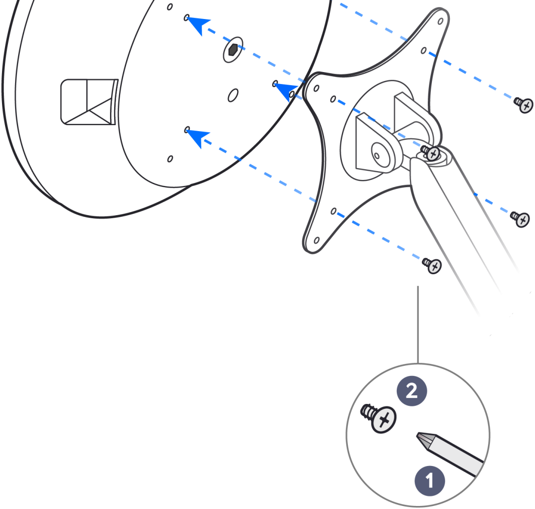

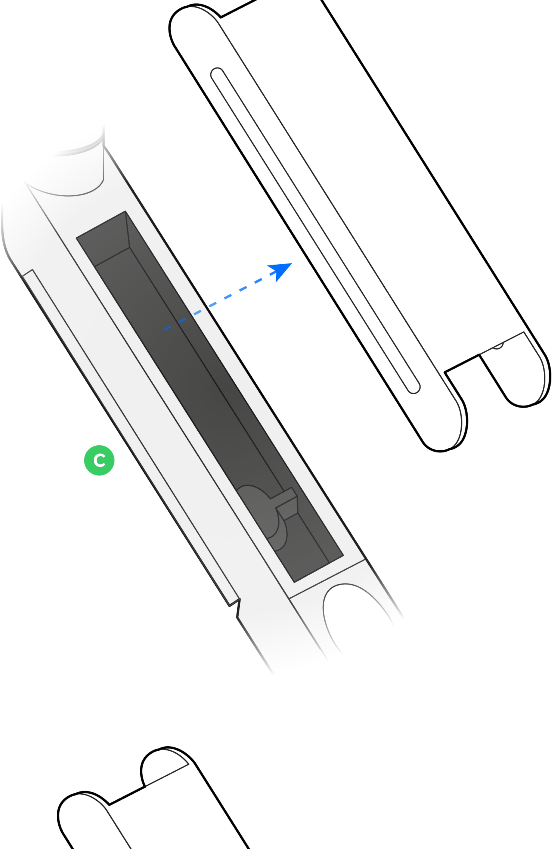

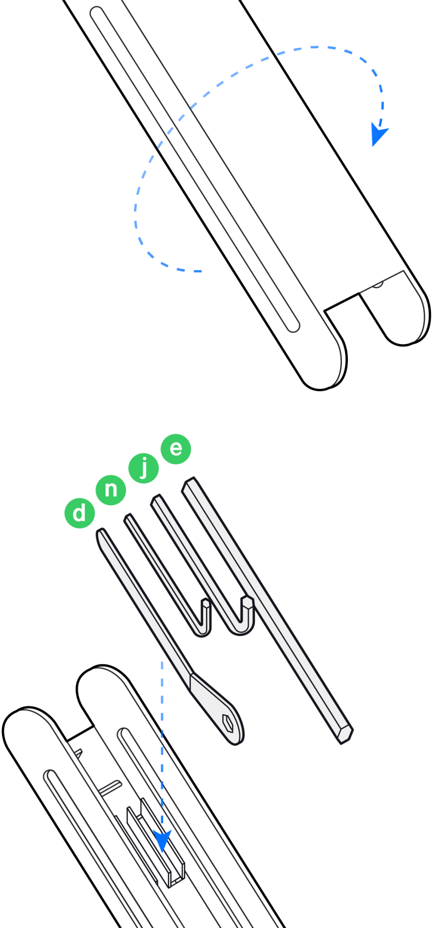

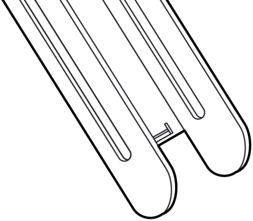

Get Answers

help.ui.com

UI Support

©2021 Ubiquiti Inc. All rights reserved. Ubiquiti, Ubiquiti Networks, the Ubiquiti U logo, UniFi, and UniFi Connect are trademarks or registered trademarks of Ubiquiti Inc. in the United States and in other countries.
All other trademarks are the property of their respective owners.