Access Point U6 Long-Range+

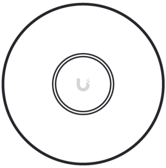

a

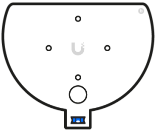

b

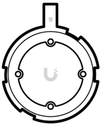

c

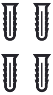

d

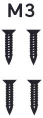

e

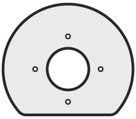

f

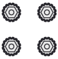

g

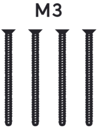

h

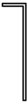

i

1

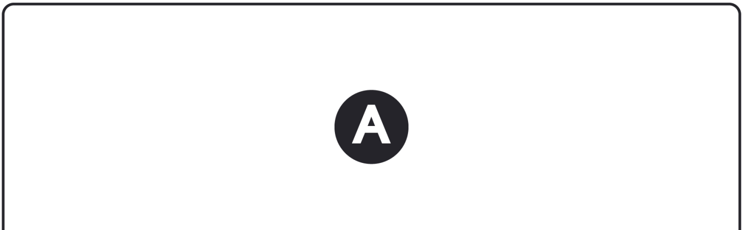

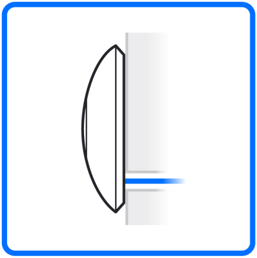

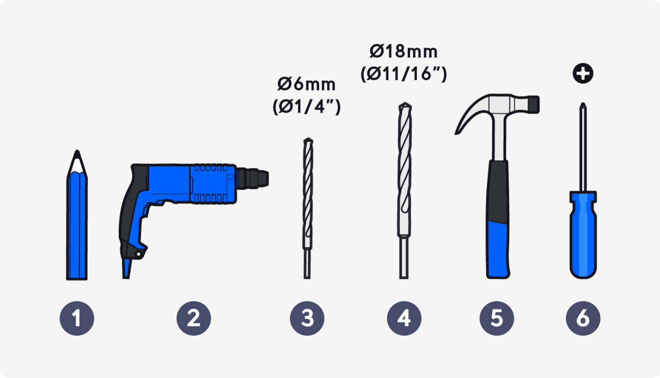
Ø6mm
(Ø1/4")
Ø18mm
(Ø11/16")
1
2
3
4
5
6

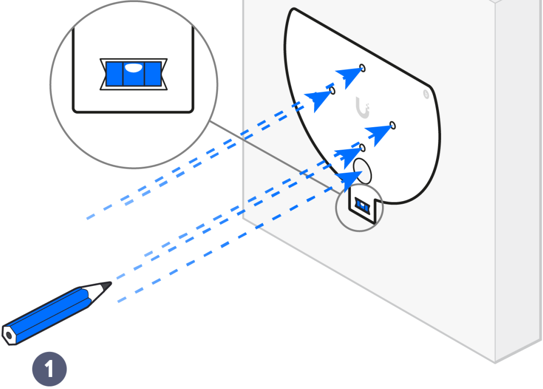

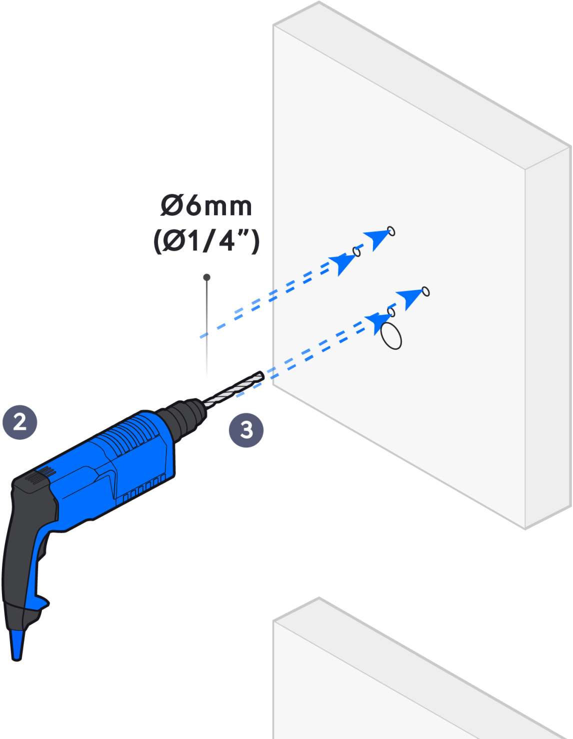

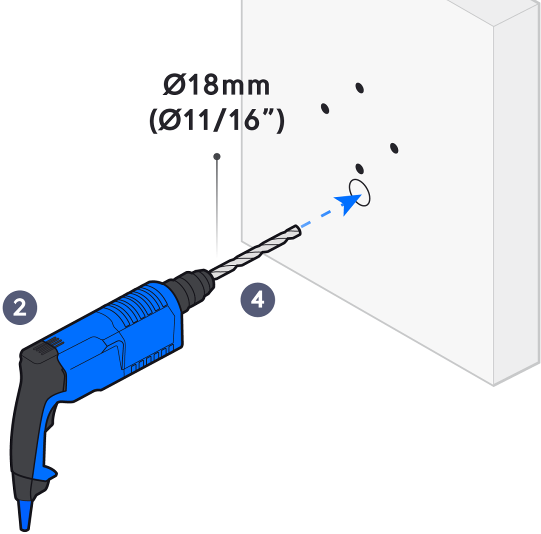
Ø18mm
(Ø11/16”)
2
4

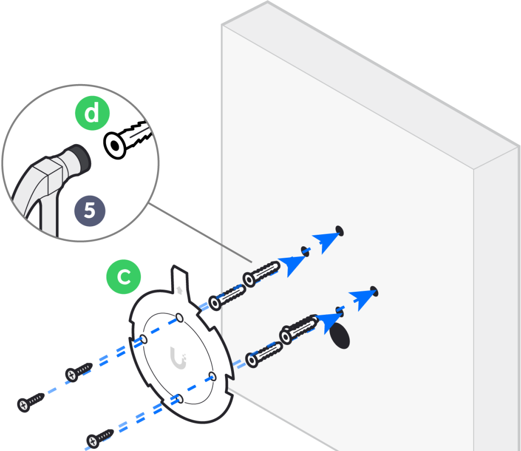

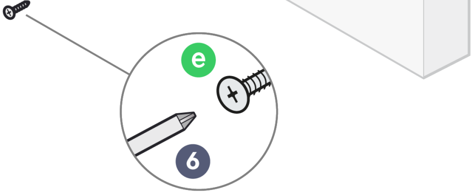

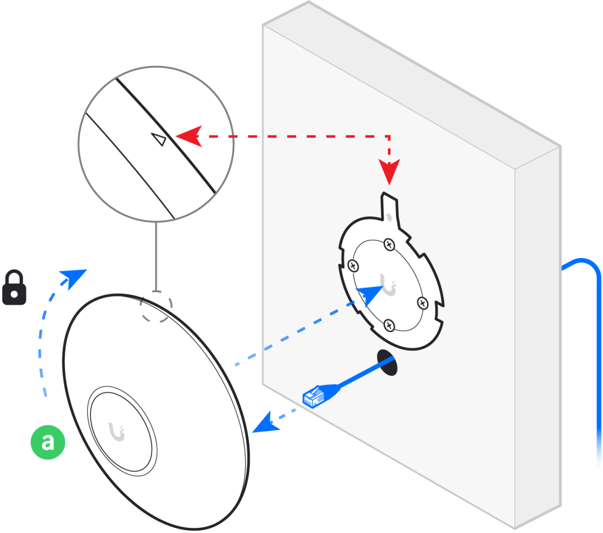

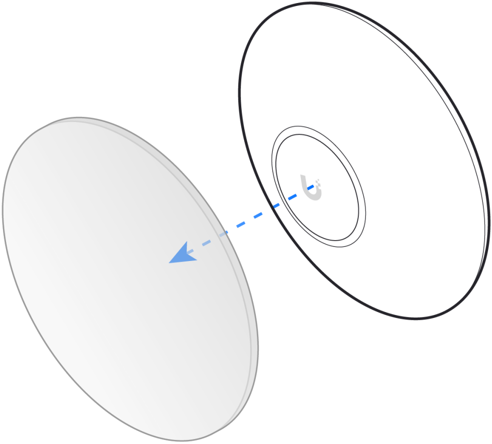

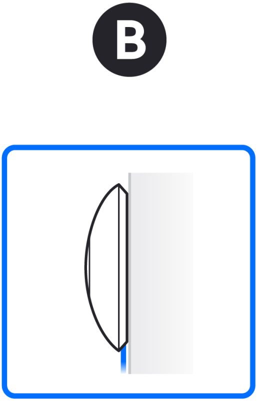

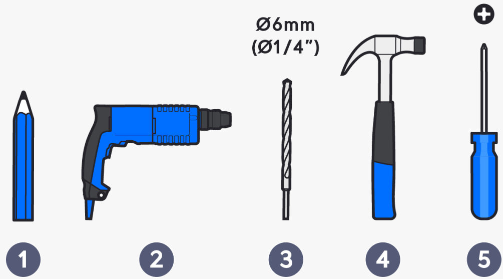
Ø6mm
(Ø1/4")
1
2
3
4
5

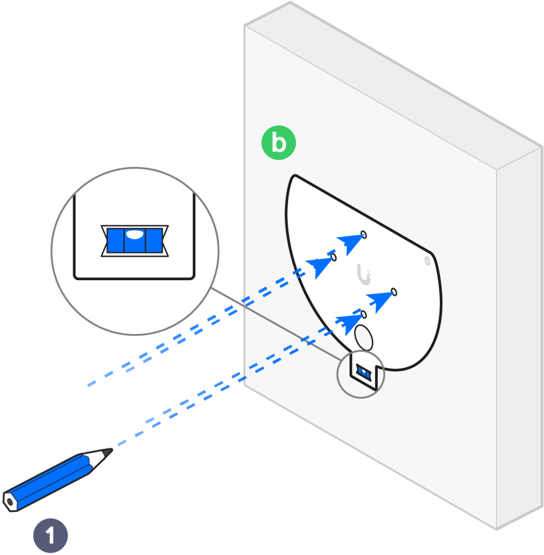

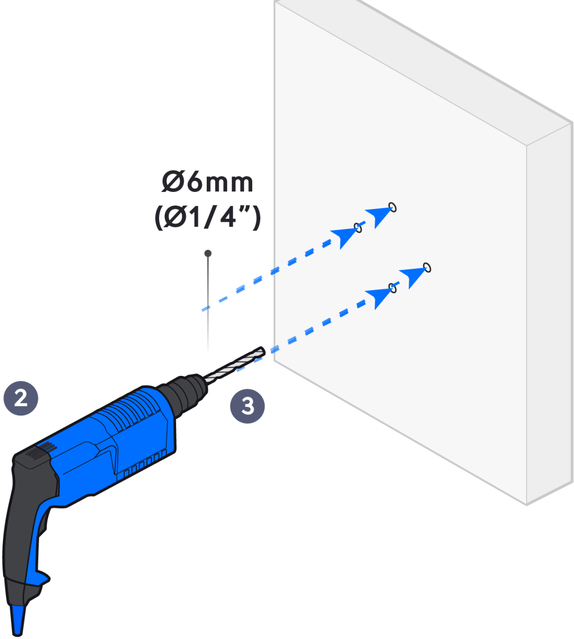

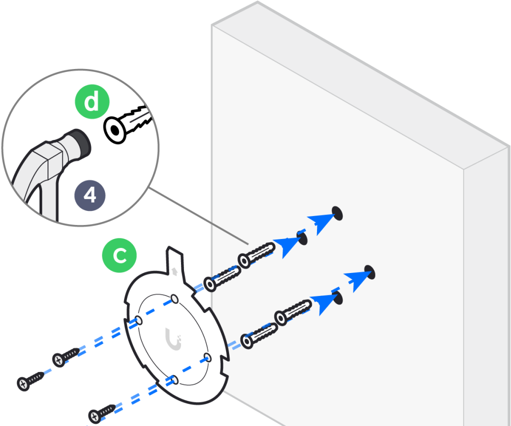

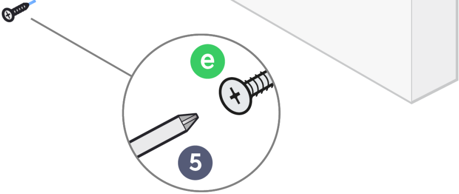

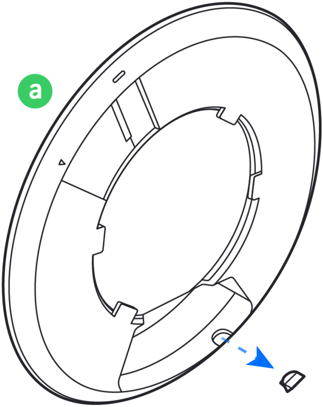

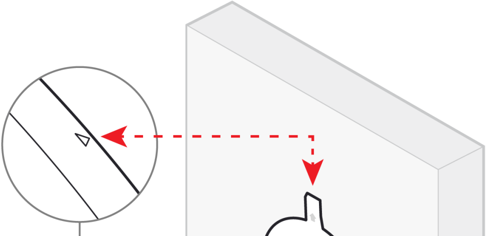

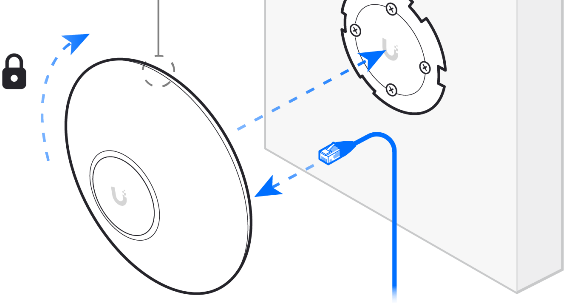

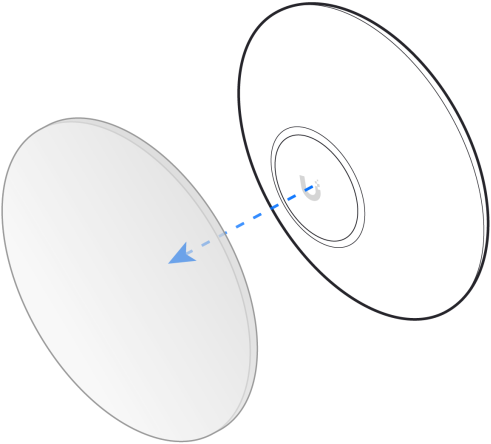

C

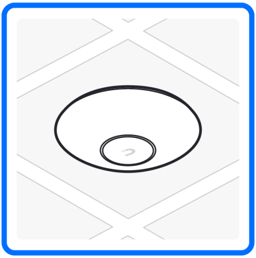

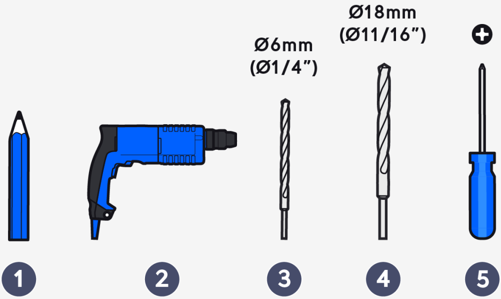
Ø6mm
(Ø1/4")
Ø18mm
(Ø11/16")
⊕
1
2
3
4
5

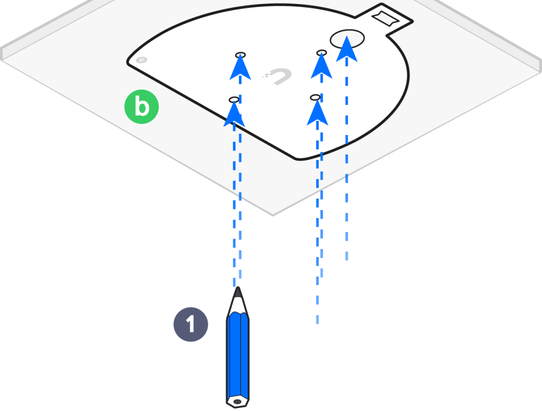

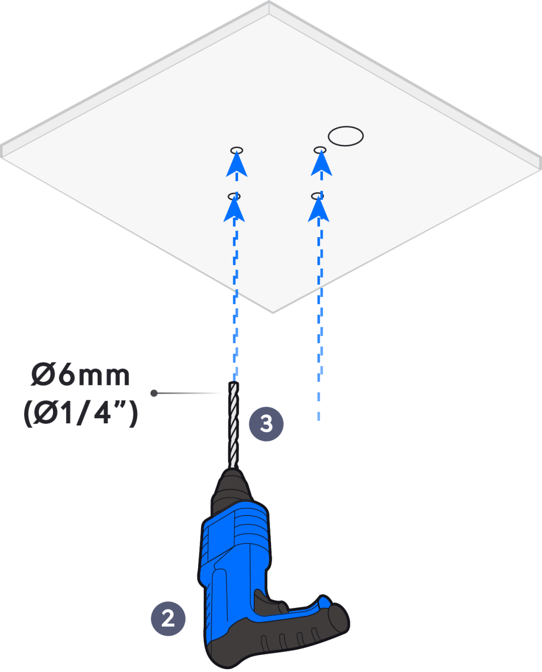

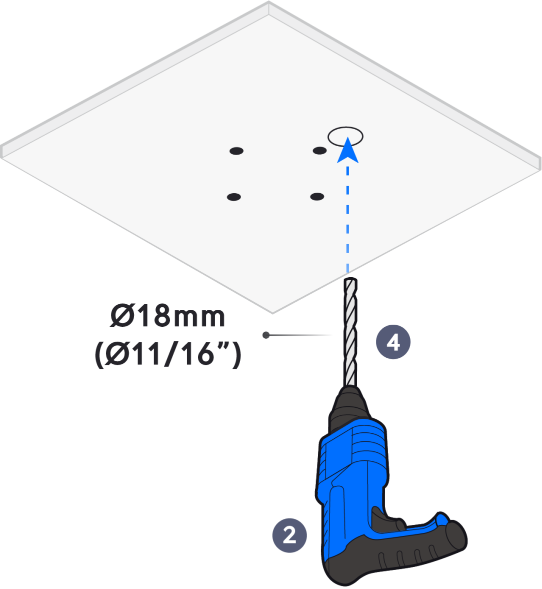

Ø18mm
(Ø11/16”)

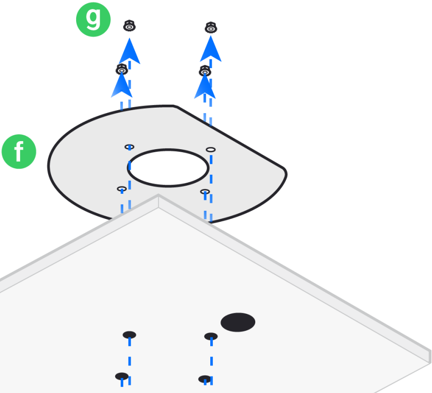

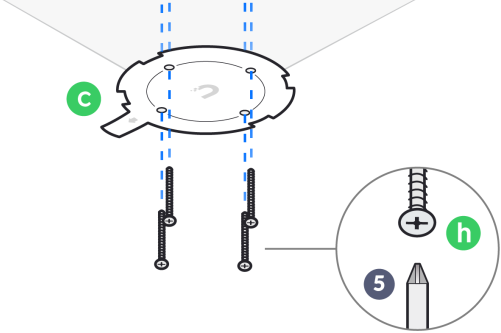

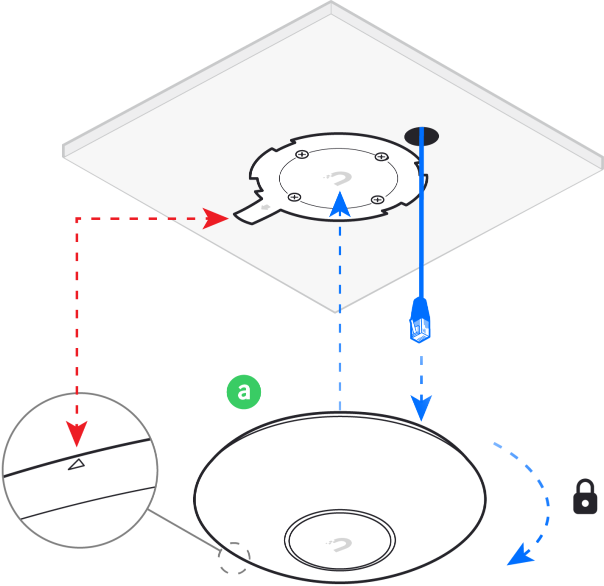

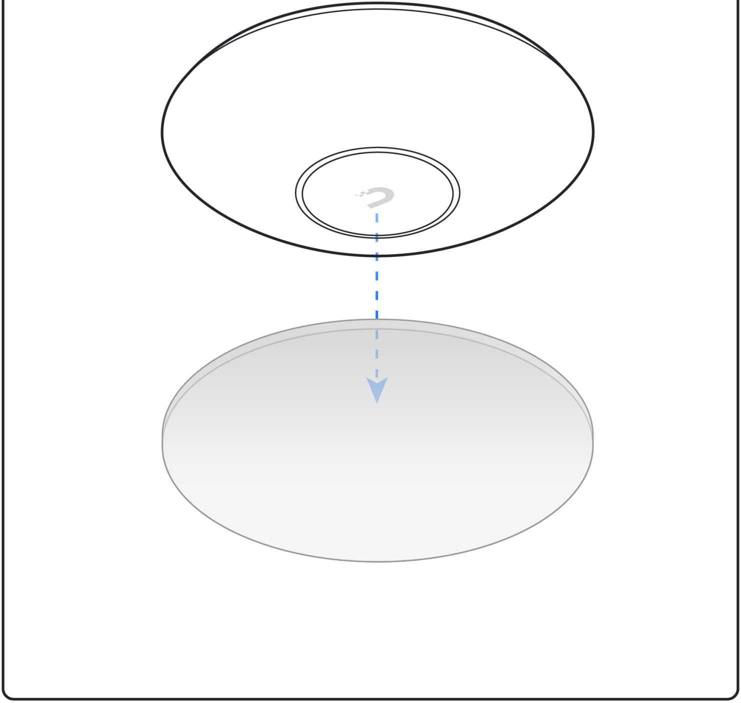

2

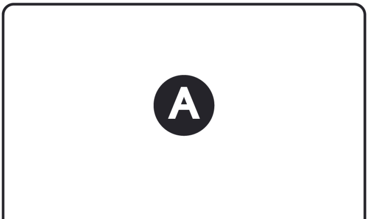

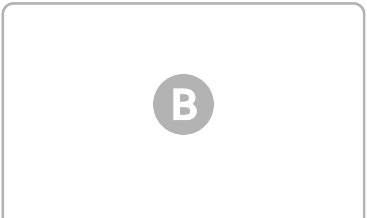

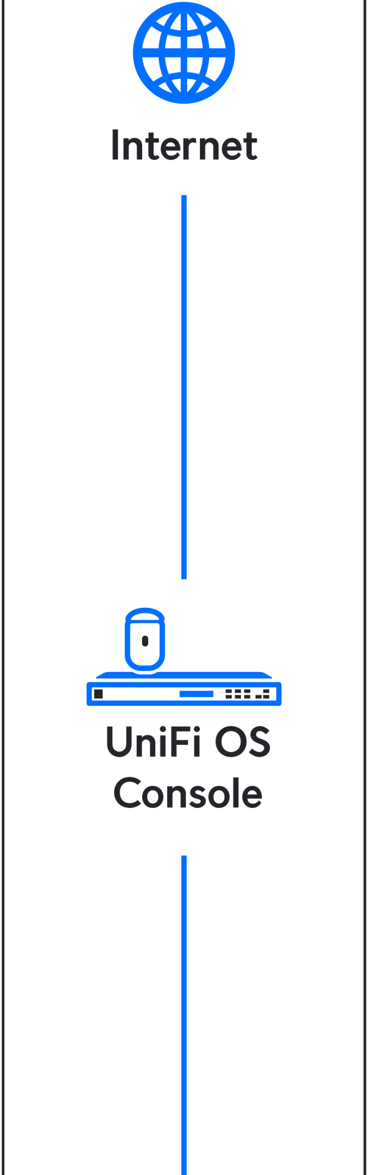
Internet
UniFi OS Console

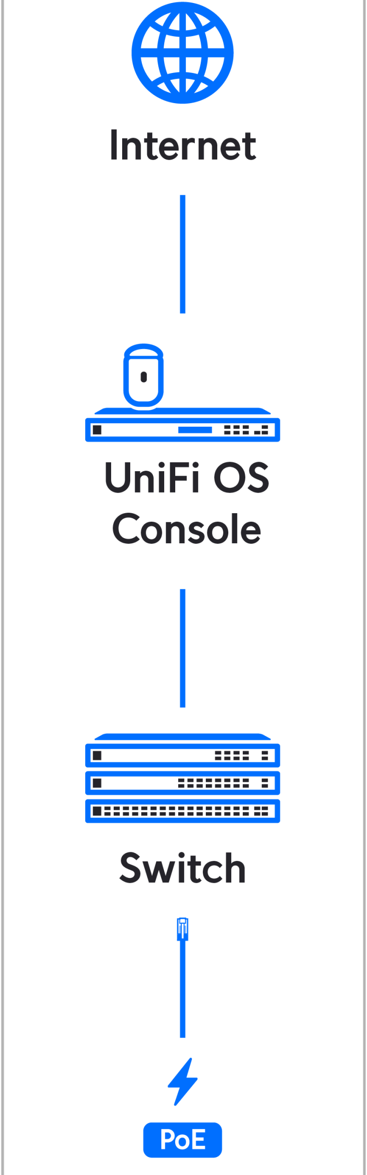
Internet
UniFi OS Console
Switch
PoE

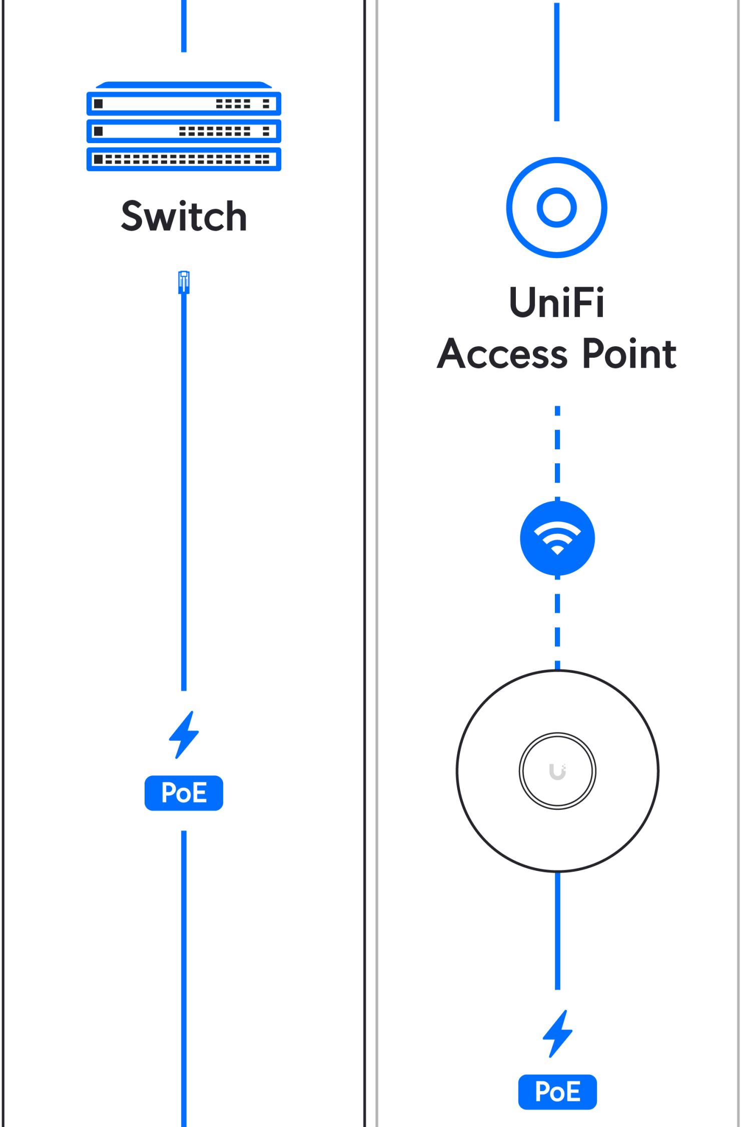
Switch
PoE
UniFi
Access Point
PoE

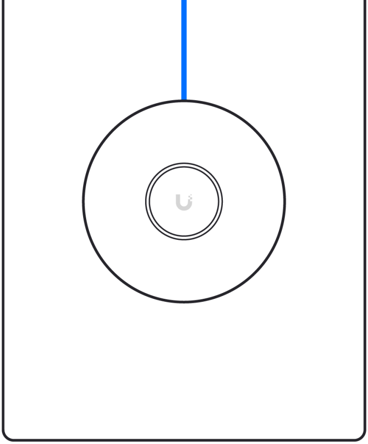

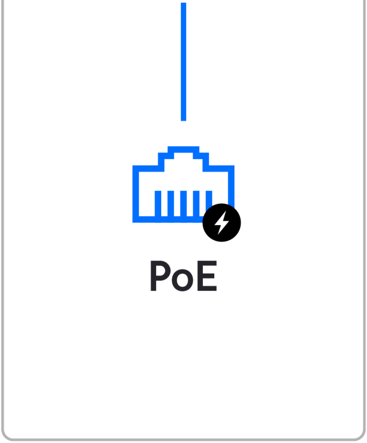

3

Download on the App Store

GET IT ON Google Play

🔗

🔗

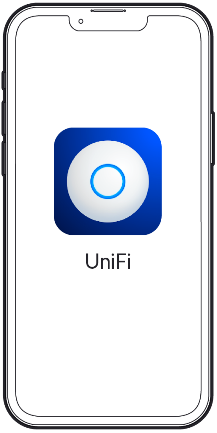

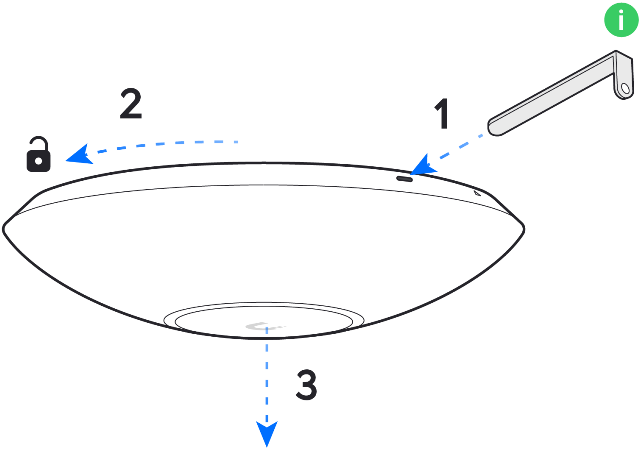

If you need further assistance, visit our Help Center or contact Ubiquiti Support.

©2021 Ubiquiti Inc. All rights reserved. Ubiquiti, Ubiquiti Networks, the Ubiquiti U logo, UniFi, and UniFi Network are trademarks or registered trademarks of Ubiquiti Inc. in the United States and in other countries. App Store and the Apple logo are trademarks of Apple Inc., registered in the U.S. and other countries. Android, Google, Google Play, the Google Play logo, and other marks are trademarks of Google LLC. All other trademarks are the property of their respective owners.