Cable Raceway Base

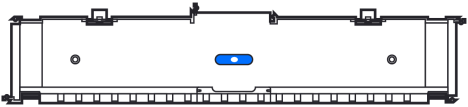

a

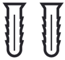

b

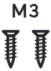

c

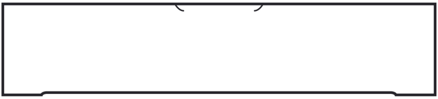

d

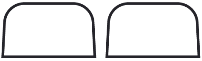

e

Cable Raceway Straight

Buy ›

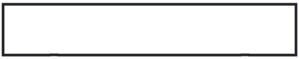

f

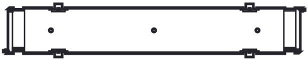

g

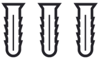

h

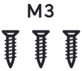

i

Cable Raceway Elbow

Buy ›

j

k

l

m

1

A

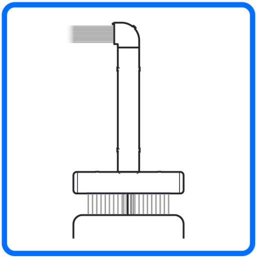

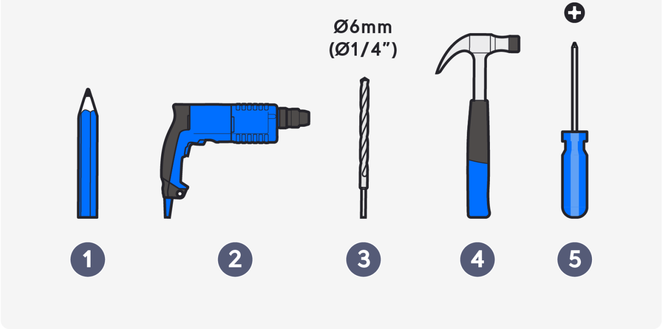
Ø6mm
(Ø1/4”)
1
2
3
4
5

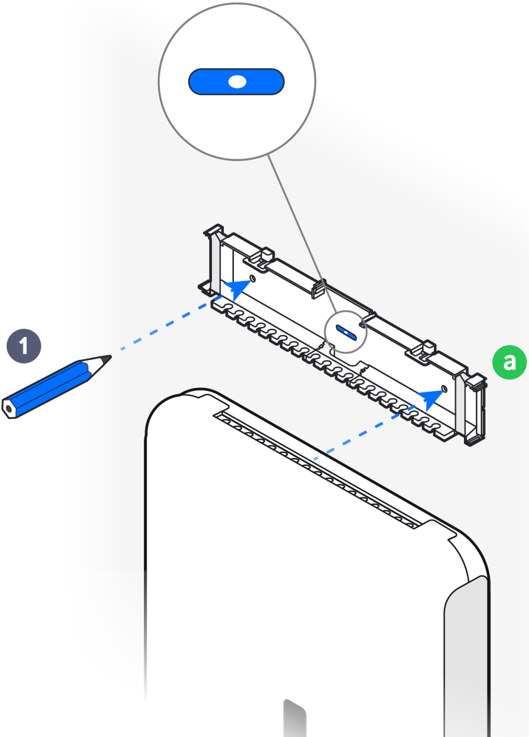

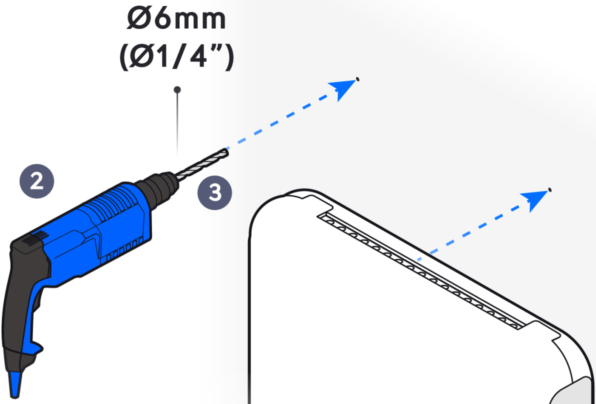

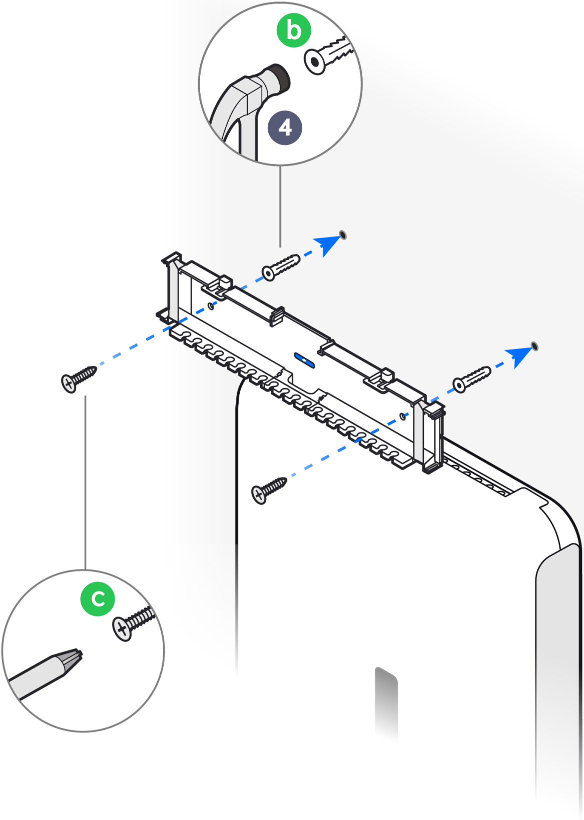

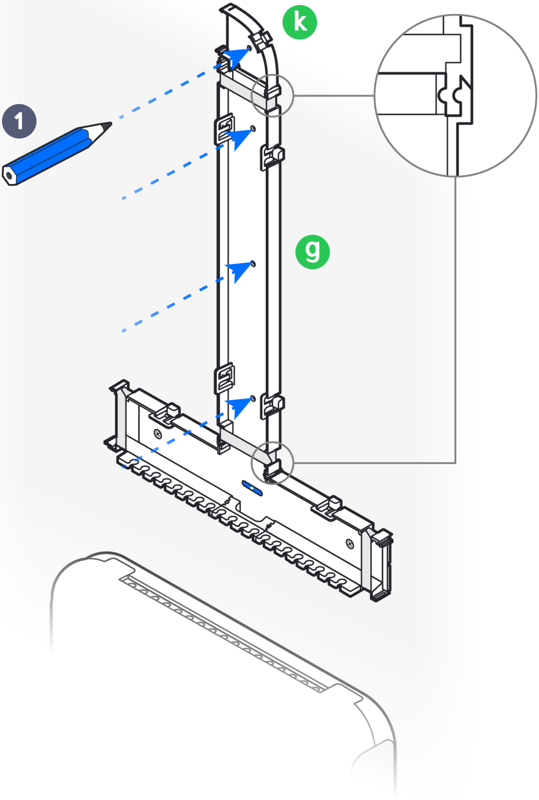

Ø6mm
(Ø1/4”)

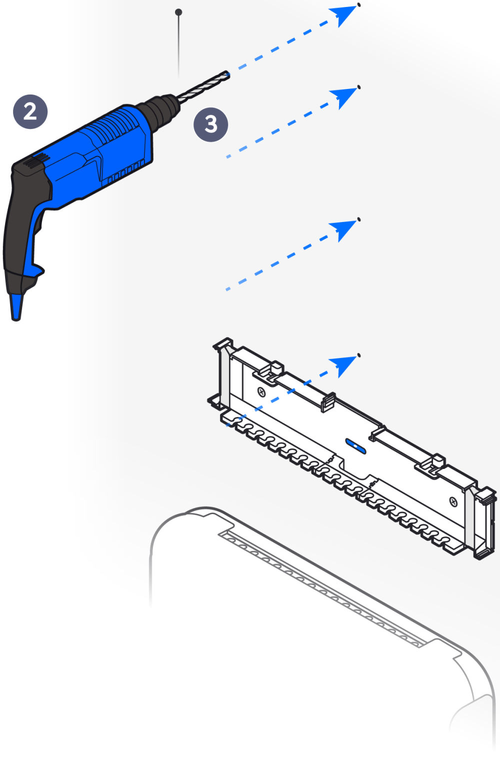

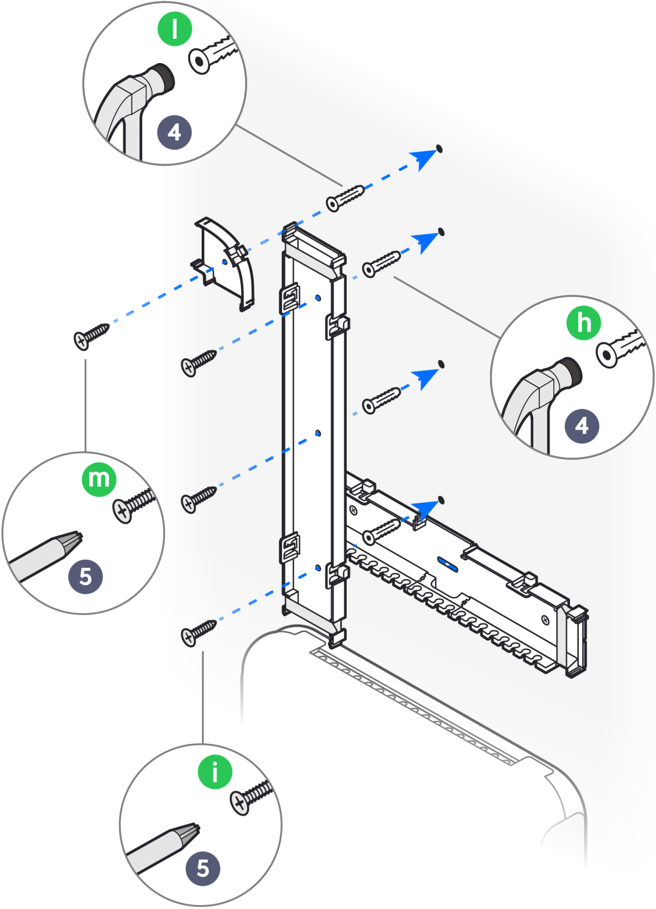

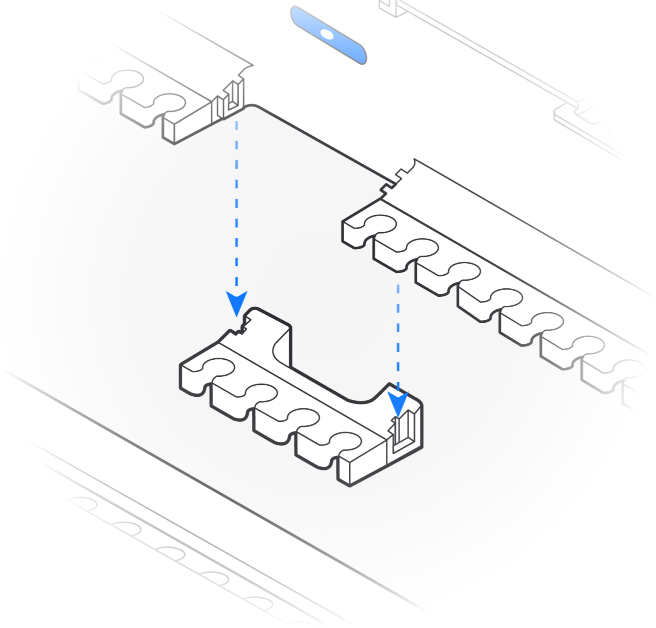

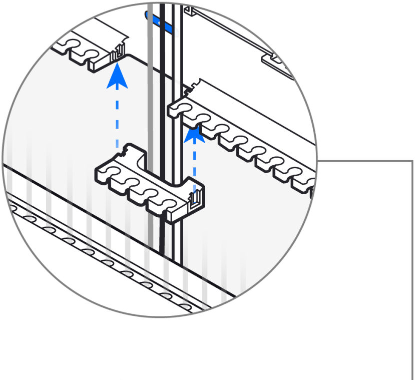

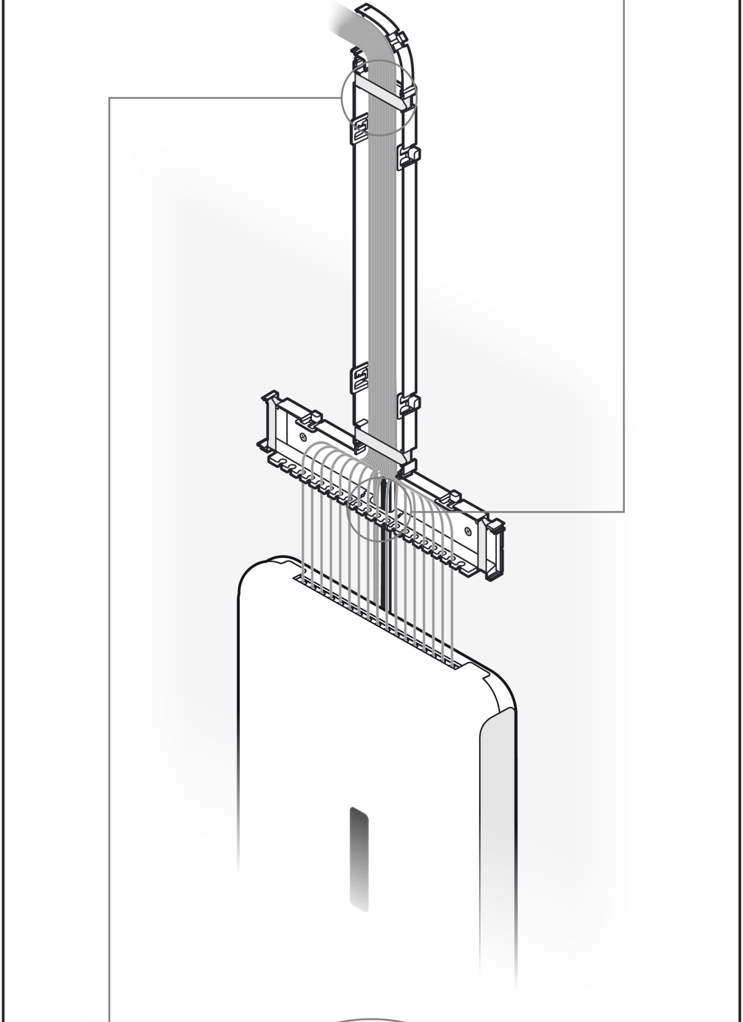

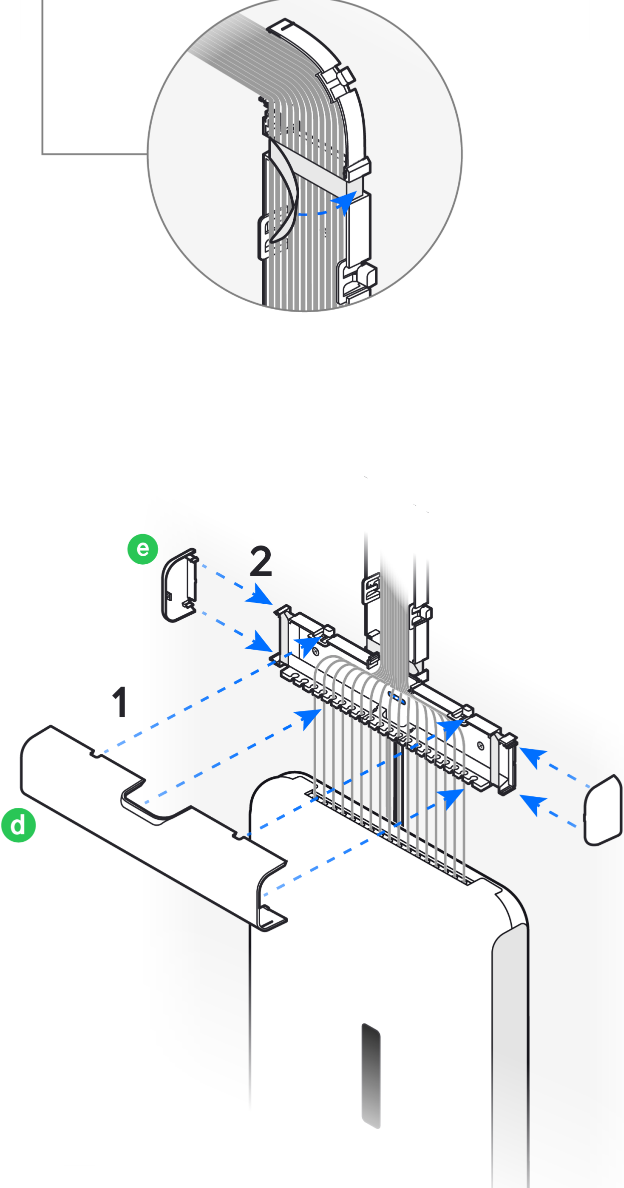

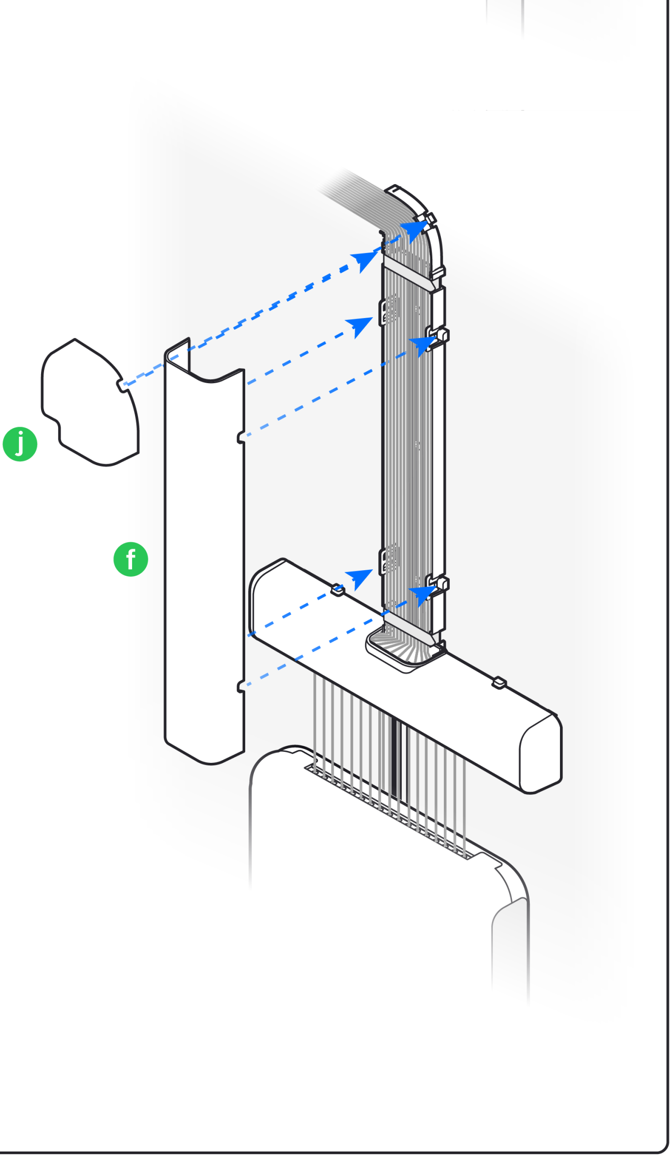

B

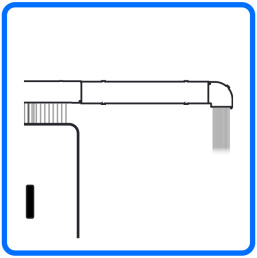

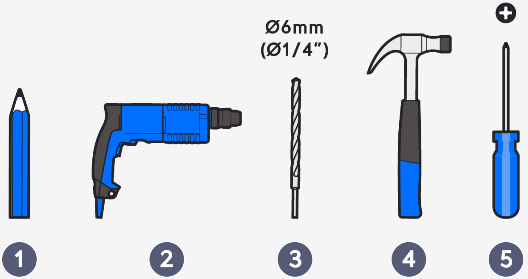
Ø6mm
(Ø1/4”)
1
2
3
4
5

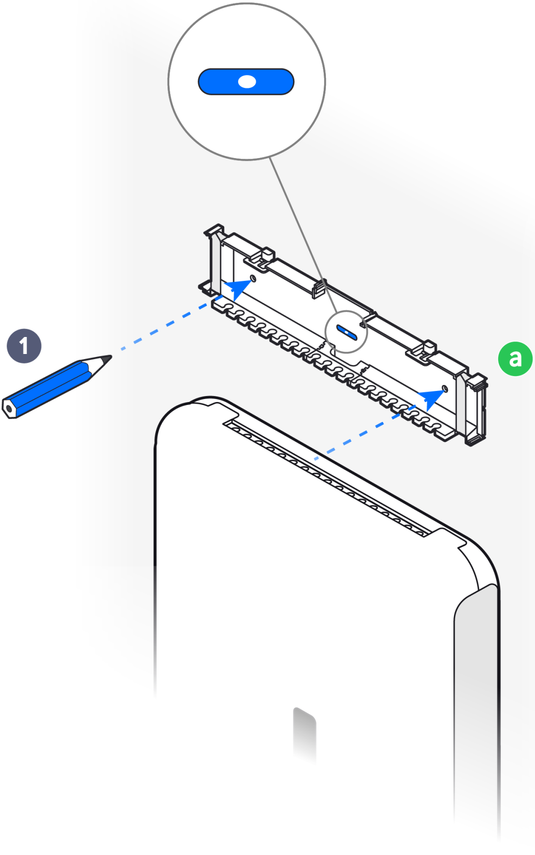

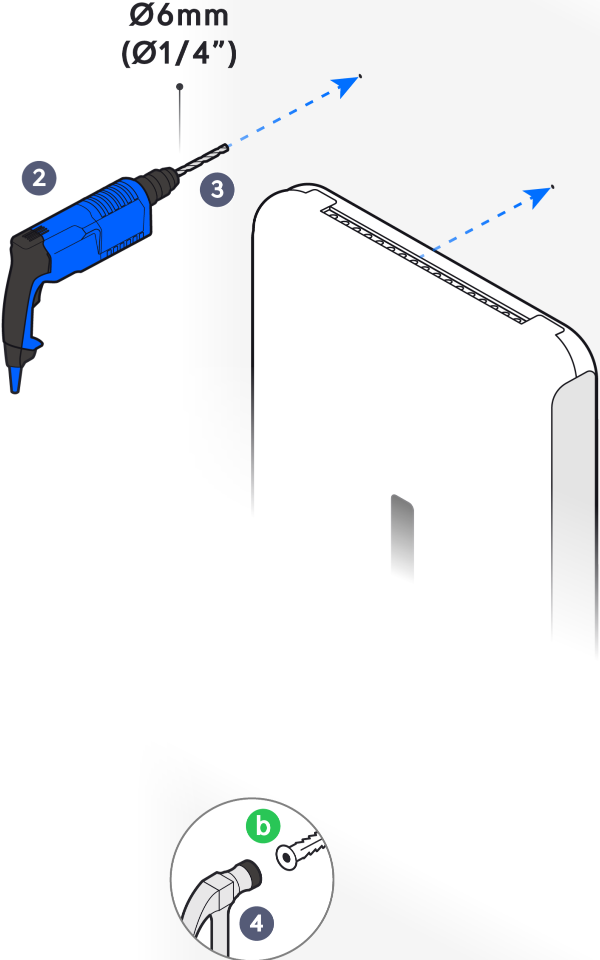
Ø6mm
(Ø1/4”)
2
3
b
4

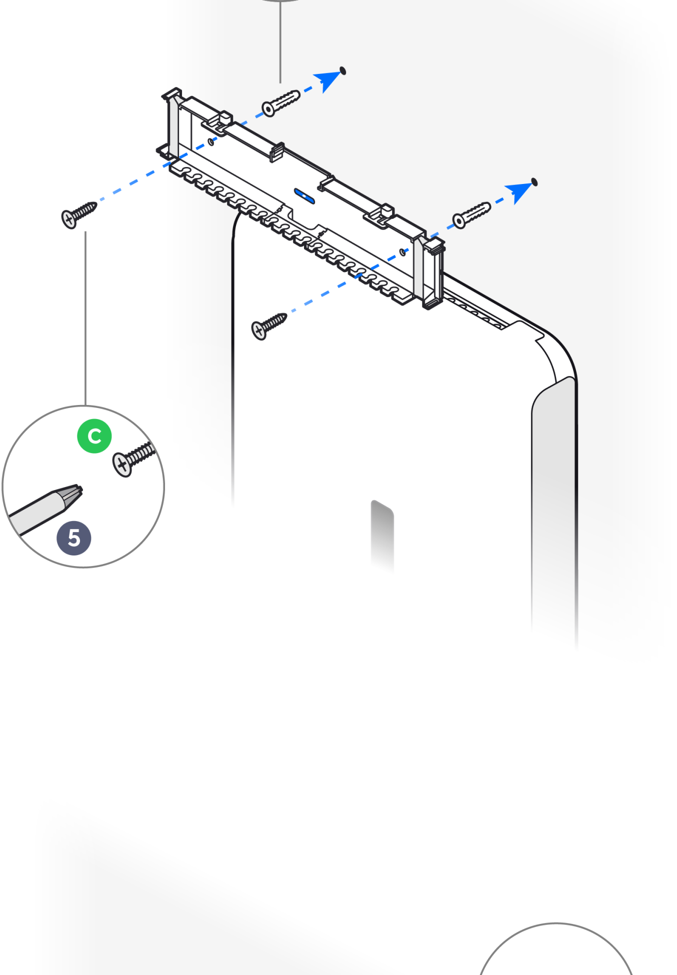

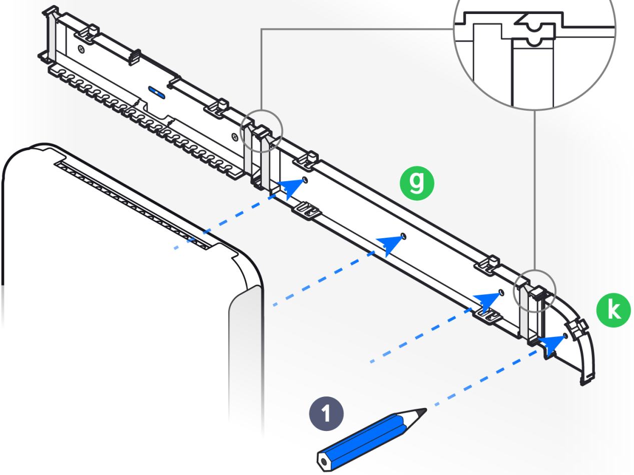

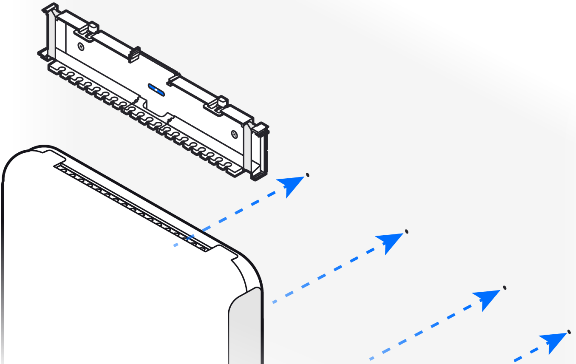

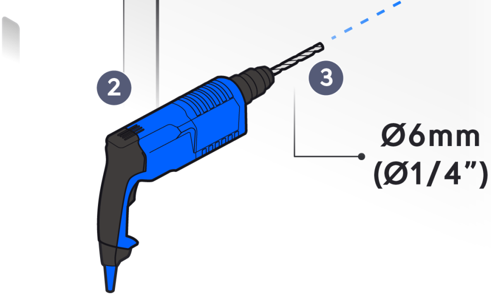

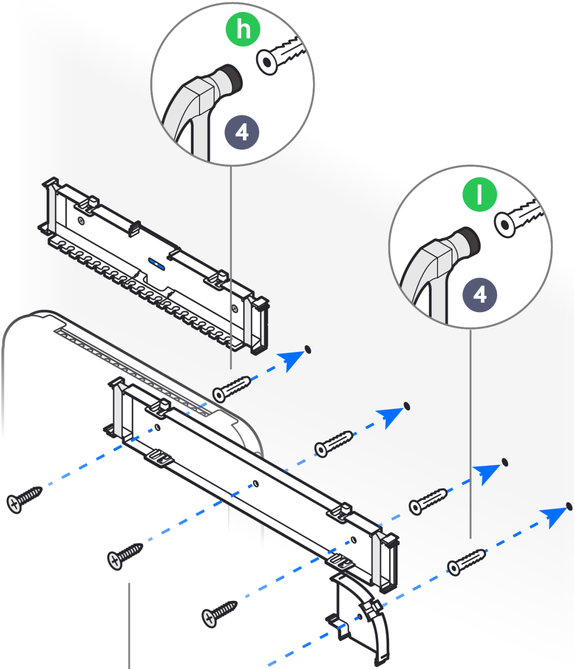

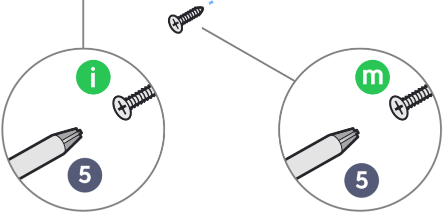

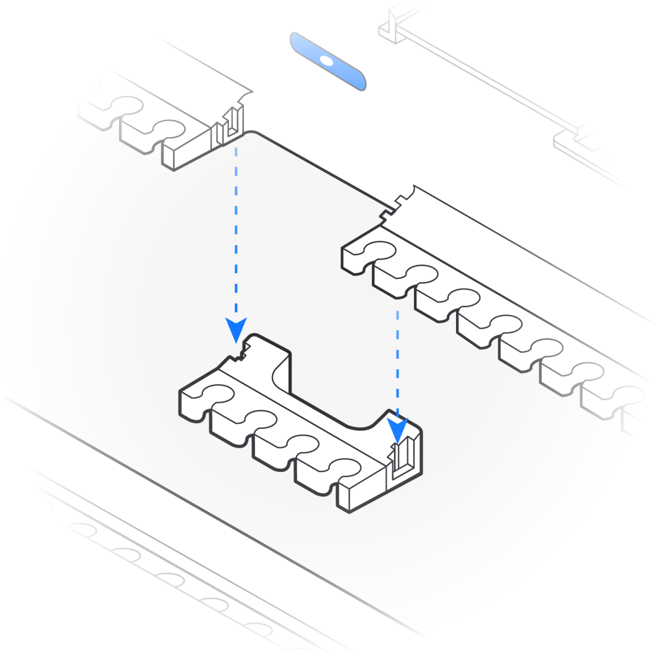

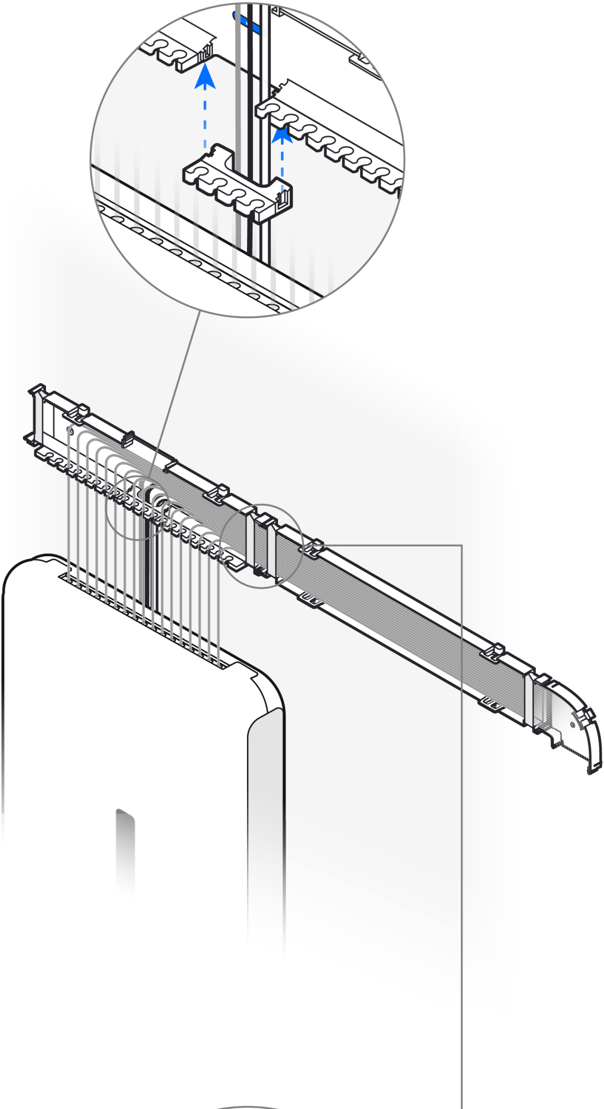

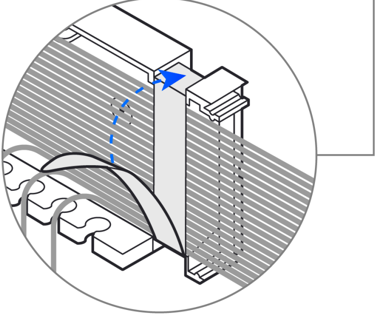

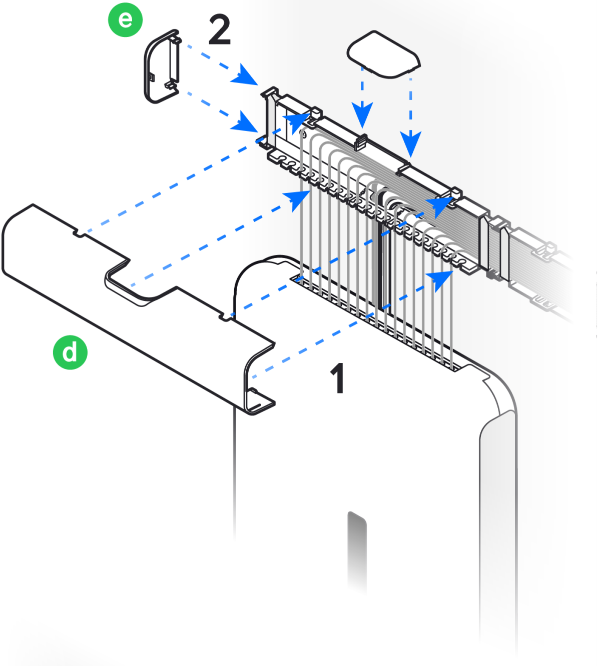

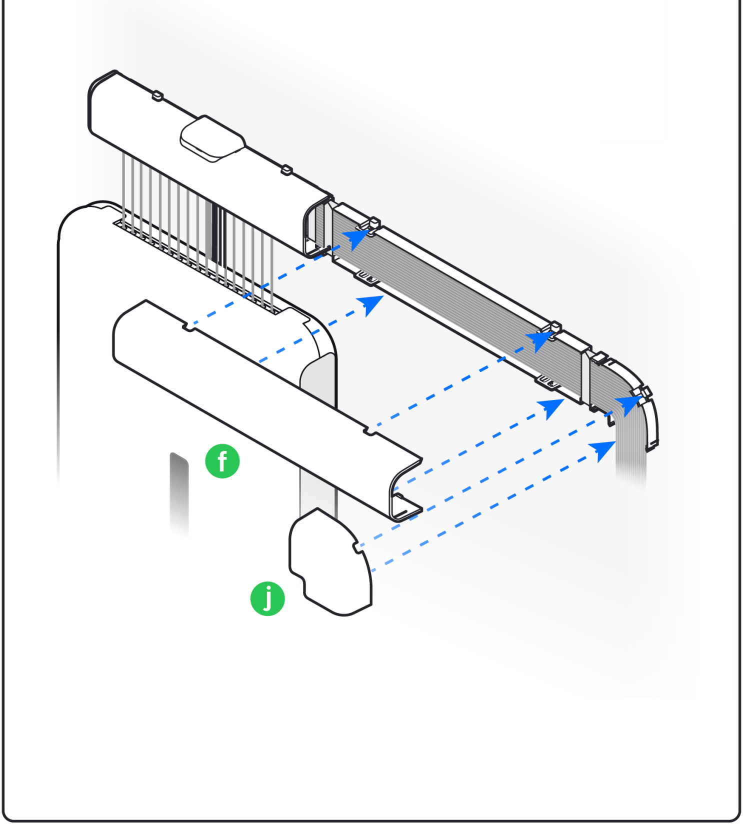

If you need further assistance, visit our Help Center or contact Ubiquiti Support.

©2022 Ubiquiti Inc. All rights reserved.